Eaton® xStorage 250–1000 kW

250–1000 kW Battery Energy Storage System Installation and Operation Manual

Powering Business Worldwide

p/n: P-164001381
Revision 01

IMPORTANT SAFETY INSTRUCTIONS - SAVE THESE INSTRUCTIONS

This manual contains important instructions that you should follow during installation and maintenance of the Battery Energy Storage System and batteries. Please read all instructions before operating the equipment and save this manual for future reference.

NOTICE

Specifications are subject to change. To ensure you have the most up-to-date content and information for this product, please review the latest manual revision on our website, www.eaton.com/xstorage-battery-energy-storage-system.

Eaton reserves the right to change specifications without prior notice. Samsung is a registered trademark of Samsung Electronics Co., Ltd. Modbus is a registered trademark of Schneider Automation, Inc. MOXA is a registered trademark and MGate is a trademark of MOXA, Inc. Spiralock is a registered trademark of Spiralock Corporation. KIRK is a registered trademark of Kirk Key Interlock company, LLC, a subsidiary of Halma plc. National Electrical Code and NEC are registered trademarks of National Fire Protection Association, Inc. ERIFLEX and FLEXIBAR are registered trademark of Erico International Corporation. Hilti and Hilti PROFIS Engineering are registered trademarks of Hilti AG, Schaan. All other trademarks are property of their respective companies.

©Copyright 2026 Eaton, Raleigh, NC, USA. All rights reserved. No part of this document may be reproduced in any way without the express written approval of Eaton.

Table of Contents

1 Introduction 1

1.1 System Description 1

1.1.1 Battery Energy Storage System (BESS) 1

1.1.2 Power Conversion System 1

1.1.3 Battery Cabinet System 2

1.1.4 Cooling and Heating 2

1.1.5 Digital Dashboard 2

1.2 Using This Manual 2

1.3 Conventions Used in This Manual 2

1.4 Symbols, Controls, and Indicators 3

1.5 For More Information 3

1.6 Getting Help 3

2 Safety Warnings 5

3 BESS Installation Plan and Unpacking 6

3.1 Creating an Installation Plan 6

3.2 Selecting an Isolation Transformer 6

3.3 Preparing the Site 7

3.3.1 Environmental Considerations 7

3.3.2 Installation Considerations and Exposures 7

3.3.3 Power Wiring Preparation 12

3.3.4 Interface Wiring Preparation 16

3.4 Inspecting and Unpacking the BESS 16

4 System Installation 17

4.1 Preliminary Installation Information 17

4.2 Battery Cabinet Installation 19

4.3 Inverter System Installation 21

4.4 Control Cabinet Installation 24

4.5 Installing External Power Wiring 26

4.6 Installing Interface Connections 31

4.7 Initial Startup 45

4.8 Completing the Installation Checklist 46

5 Understanding BESS Operation 48

5.1 BESS Overview 48

5.2 System Application 49

5.3 State Definitions and Commands 51

5.4 Grid Following BESS Operation 58

5.4.1 Energy Services 58

5.4.2 Operation Modes 66

5.4.3 User Modes 67
5.4.4 Limiter Functions 68
5.4.5 Additional Grid Following Features 72
5.4.6 Overall Prioritization Strategy 74
5.5 Grid Forming BESS Operation 74
5.5.1 Standalone BESS Applications 75
5.5.2 Microgrid Applications 77

6 Configuration, Control, and User Interfaces 79
6.1 Parameter List 79
6.1.1 Settings 80
6.1.2 Controls 90
6.1.3 Monitoring 91
6.1.4 Alarms 103
6.1.5 Other Parameters 103
6.2 Connecting to the User Interfaces 104
6.3 Using the Local User Interfaces 105
6.3.1 Local WebApp 105
6.3.2 Cloud WebApp 115
6.3.3 Local Modbus Interface 115
6.4 Remote User Interfaces 116
6.4.1 Using the Remote Modbus Interfaces 116
6.5 Transitioning Between Local and Remote User Modes 116
6.6 Autonomous State and User Interfaces 117

7 BESS Operating Instructions 119
7.1 Startup Procedure: Grid Connected 119
7.1.1 Basic Standalone BESS Operation as a Local User 121
7.1.2 Basic Microgrid BESS Operation as a Remote User 126
7.2 Startup Procedure: Grid Disconnected (Black Start) 130
7.2.1 Basic Standalone BESS Operation as a Local User 132
7.2.2 Basic Microgrid BESS Operation as a Remote User 136
7.3 Shutdown/Decommissioning 139
7.4 Startup After Extended Blackout 139
7.5 Emergency Power Off 140
7.6 Fire Procedure 140
7.7 External Warning Communication System 141

8 Schematics and Site Plans 143
8.1 Schematics 143
8.2 Site Plan Drawings 150

9 System Maintenance 169

9.1 Important Safety Instructions 169
9.2 Preventive Maintenance Schedule 169

10 Product Specifications 170
10.1 Models (CTO) 170
10.2 Input Specifications 174
10.3 Output Specifications 174
10.4 Environmental Specifications 174
10.5 Battery Characteristics 175
10.6 End User Agreement 175

11 Warranty 180

12 Appendix 181
12.1 Battery Safety Data Sheets 181

List of Figures

Figure 1. Eaton xStorage 250–1000 System 1
Figure 2. xStorage 250-1000 Dimensions (Front View) 9
Figure 3. xStorage 250-1000 Dimensions (Right Side View) 9
Figure 4. xStorage 250-1000 Dimensions (Top View) 10
Figure 5. xStorage 250-1000 Dimensions (Bottom View) 10
Figure 6. xStorage 250-1000 Component Clearances 10
Figure 7. Battery Cabinet Service Clearances 11
Figure 8. xStorage 250-1000 Service Clearances 12
Figure 9. Cabinet Eyebolt Locations 17
Figure 10. Weight and Center of Gravity, Front View 18
Figure 11. Weight and Center of Gravity, Right Side View 19
Figure 12. Battery Cabinet Conduit and Anchor Locations 20
Figure 13. Battery Cabinet Chemical Bolt Anchor Dimensions 21
Figure 14. Inverter Anchor Dimensions 23
Figure 15. Inverter Cable Conduit Entry Points 24
Figure 16. Control Cabinet Conduit and Anchor Locations 26
Figure 17. Inverter Power Terminal dimensions to left side 27
Figure 18. Inverter Power Terminal dimensions to floor 28
Figure 19. AC Busbar Terminal detail 28
Figure 20. DC Busbar Terminal detail 29
Figure 21. Grounding Terminal detail 29
Figure 22. Battery Cabinet DC Connection Locations & Cable Connector 30
Figure 23. Battery Cabinet Ground 31
Figure 24. Control Cabinet AC Power, AUX power and Meter Terminals for EnerOne+ (Up to 3 battery racks) 34
Figure 25. Control Cabinet AC Power, AUX power and Meter Terminals for EnerOne+ (4 - 8 battery racks) 35
Figure 26. Control Cabinet ground location 35
Figure 27. Battery Cabinet AUX Power and BMS connector locations 36
Figure 28. Battery Cabinet JXH1 connection for EnerOne+ (up to 3 battery racks) 37
Figure 29. Battery Cabinet JXH1 connection for EnerOne+ (4-8 battery racks) 38
Figure 30. Control Cabinet TB3 & ES1 Location and detail 39
Figure 31. Battery Cabinet JX2 & JX3 connections for EnerOne+ 40
Figure 32. Inverter Inside Front Door XD17, XD3, X22 & M10 Terminal locations and Modbus TCP, Communication and AUX power wire routing 40
Figure 33. Inverter Cooling and Control Power connections 40
Figure 34. Lower Inverter Section Communication and AUX power wire routing 41
Figure 35. Inverter Remote Sense and Modbus TCP location and connections 42
Figure 36. Power Meter SBA and SBB location and connections 43
Figure 37. MX2 Control panel dimensions and terminal locations 44
Figure 38. MX2 Control panel connections 45

Figure 39. xStorage 250-1000 Simplified Block Diagram 48
Figure 40. xStorage 250-1000 Integrated into a Power System 50
Figure 41. Control Cabinet Subassemblies, Isometric and Partial Front View 51
Figure 42. Battery State Machine Diagram 55
Figure 43. PCS State Machine Diagram 56
Figure 44. BESS State Machine Diagram 57
Figure 45. Idle Service 59
Figure 46. Peak Shaving Service 60
Figure 47. Target SoC Service 61
Figure 48. Maintain SoC Service 62
Figure 49. PQ (or Power) Setpoint Service – Open Loop 63
Figure 50. PQ (or Power) Setpoint Service – Closed Loop 64
Figure 51. Zero Power Service 65
Figure 52. Energy Services Disabled 66
Figure 53. Example of PV Source Overproduction 72
Figure 54. Example of PV Source Overproduction 73
Figure 55. BESS Prioritization Strategy and Data Flow 74
Figure 56. BESS Standalone System with Automatic Islanding Control 76
Figure 57. BESS Standalone System with PV Self-Consumption 77
Figure 58. Physical Access to User Interfaces 104
Figure 59. Local WebApp Control Page 106
Figure 60. Local WebApp Schedules Page 108
Figure 61. Local WebApp Event Details Page 109
Figure 62. Local WebApp Meters Page 111
Figure 63. Local WebApp Meter Details Page 112
Figure 64. Local WebApp Configuration Page 113
Figure 65. Local WebApp Configuration Page 114
Figure 66. Local WebApp Timeline Details Page 115
Figure 67. xStorage 250-1000 Generic Power System Layout 120
Figure 68. Inverter and Battery Auxiliary Power Indicator Locations 121
Figure 69. Inverter F-Stop Location 122
Figure 70. Inverter and Battery Run Indicator Locations 125
Figure 71. Inverter and Battery Run Indicator Locations 129
Figure 72. xStorage 250-1000 Generic Power System Layout with Automatic Grid-Forming Control 131
Figure 73. Inverter and Battery Auxiliary Power Indicator Locations 133
Figure 74. Inverter F-Stop Location 134
Figure 75. Inverter and Battery Run Indicator Locations 136
Figure 76. EWCS Local Alarm and Horn Location 142
Figure 77. P-110001123, xStorage 250–1000 Energy Storage System — Oneline — Page 1 144
Figure 78. P-110001123, xStorage 250–1000 Energy Storage System — Oneline — Page 2 145
Figure 79. P-110001123, xStorage 250–1000 Energy Storage System — Oneline — Page 3 146

Figure 80. P-110001123, xStorage 250–1000 Energy Storage System — Oneline — Page 4 147
Figure 81. P-110001123, xStorage 250–1000 Energy Storage System — Oneline — Page 5 148
Figure 82. P-110001123, xStorage 250–1000 Energy Storage System — Oneline — Page 6 149
Figure 83. P-110001098, xStorage 250–1000, System Elevation Drawing — Page 1 151
Figure 84. P-110001098, xStorage 250–1000, System Elevation Drawing — Page 2 152
Figure 85. P-110001098, xStorage 250–1000, System Elevation Drawing — Page 3 153
Figure 86. P-110001098, xStorage 250–1000, System Elevation Drawing — Page 4 154
Figure 87. P-110001098, xStorage 250–1000, System Elevation Drawing — Page 5 155
Figure 88. P-110001098, xStorage 250–1000, System Elevation Drawing — Page 6 156
Figure 89. P-110001098, xStorage 250–1000, System Elevation Drawing — Page 7 157
Figure 90. P-110001098, xStorage 250–1000, System Elevation Drawing — Page 8 158
Figure 91. P-110001098, xStorage 250–1000, System Elevation Drawing — Page 9 159
Figure 92. P-110001098, xStorage 250–1000, System Elevation Drawing — Page 10 160
Figure 93. P-110001098, xStorage 250–1000, System Elevation Drawing — Page 11 161
Figure 94. P-110001098, xStorage 250–1000, System Elevation Drawing — Page 12 162
Figure 95. P-110001098, xStorage 250–1000, System Elevation Drawing — Page 13 163
Figure 96. P-110001098, xStorage 250–1000, System Elevation Drawing — Page 14 164
Figure 97. P-110001098, xStorage 250–1000, System Elevation Drawing — Page 15 165
Figure 98. P-110001098, xStorage 250–1000, System Elevation Drawing — Page 16 166
Figure 99. P-110001098, xStorage 250–1000, System Elevation Drawing — Page 17 167
Figure 100. P-110001098, xStorage 250–1000, System Elevation Drawing — Page 18 168
Figure 101. xStorage 250–1000 CTO Chart — Models — Page 1 171
Figure 102. xStorage 250–1000 CTO Chart — Models — Page 2 172
Figure 103. xStorage 250–1000 CTO Chart — Models — Page 3 173

List of Tables

Table 1. Isolation Transformer Sizing 7
Table 2. BESS Component Weight 8
Table 3. 480V Power Ratings and External Wiring Recommendations 13
Table 4. DC Power Ratings and External Wiring Recommendations 14
Table 5. Power Cable Conduit Requirements 14
Table 6. Recommended BESS Feeder Circuit Breaker Ratings 15
Table 7. Recommended CB2 Circuit Breaker Rating 15
Table 8. Inverter External Power Cable Terminations 15
Table 9. Battery Cabinet External Power Cable Terminations 16
Table 10. Weight and Center of Gravity 18
Table 11. Battery Cabinet Anchor Bolt Specifications 21
Table 12. Inverter MODBUS TCP CAT6 Cable Ferrite Specification 33
Table 13. xStorage 250-1000 Battery States 51
Table 14. xStorage 250-1000 PCS States 52
Table 15. xStorage 250-1000 BESS States 53
Table 16. xStorage 250-1000 State Commands 54
Table 17. xStorage 250-1000 Fault Handling Commands 54
Table 18. xStorage 250-1000 Parameter Prefixes 79
Table 19. xStorage 250-1000 Settings Parameters 80
Table 20. xStorage 250-1000 Controls Parameters 90
Table 21. xStorage 250-1000 Monitoring Parameters 91
Table 22. xStorage 250-1000 Alarm Parameters 103
Table 23. xStorage 250-1000 Other Parameters 103
Table 24. Local and Remote User Mode Relevant Logic Parameters 117
Table 25. Local and Remote User Logic 117
Table 26. Local and Remote User Logic While in Autonomous State 118
Table 27. Local User Startup – Limit Settings 123
Table 28. Local User Startup – Operation Mode and Energy Service Settings 123
Table 29. Local User Startup – Clear Faults and Warnings 123
Table 30. Local User Startup – BESS State Verification Before Startup 124
Table 31. Local User Startup – Command On-Grid Start 124
Table 32. Local User Startup – BESS State Verification After Startup 125
Table 33. Local User Startup – Configure Peak Shaving Setpoint 126
Table 34. Local User Startup – Transition to Peak Shaving Service 126
Table 35. Remote User Startup – Initiate Remote User Mode 127
Table 36. Remote User Startup – Limit Settings 127
Table 37. Remote User Startup – Operation Mode and Energy Service Settings 128
Table 38. Remote User Startup – Initiate and Sustain Heartbeat 128
Table 39. Remote User Startup – Clear Faults and Warnings 128

Table 40. Remote User Startup – BESS State Verification Before Startup 128
Table 41. Remote User Startup – Command On-Grid Start 129
Table 42. Remote User Startup – BESS State Verification After Startup 130
Table 43. Remote User Startup – Configure PQ Power Setpoints 130
Table 44. Local User Startup – Clear Faults and Warnings 134
Table 45. Local User Startup – BESS State Verification Before Startup 135
Table 46. Local User Startup – Command Off-Grid Start 135
Table 47. Local User Startup – BESS State Verification After Startup 136
Table 48. Remote User Startup – Initiate Remote User Mode 137
Table 49. Remote User Startup – Initiate and Sustain Heartbeat 137
Table 50. Remote User Startup – Clear Faults and Warnings 138
Table 51. Remote User Startup – BESS State Verification Before Startup 138
Table 52. Remote User Startup – Command Off-Grid Start 138
Table 53. Remote User Startup – BESS State Verification After Startup 139
Table 54. Maintenance Schedule 169
Table 55. Input Specifications 174
Table 56. Output Specifications 174
Table 57. Environmental Specifications 174
Table 58. Battery Characteristics 175

Chapter 1 Introduction

1.1 System Description

The Eaton xStorage® 250-1000 outdoor rated battery energy storage system (BESS) provides advanced energy storage capabilities used to minimize a customer's exposure to high demand charges from the local utility company and protect loads during utility outages. The xStorage 250-1000 allows customers to reduce operating costs through energy market participation and is capable of peak shaving, time of use optimization, load shifting, backup power, and demand response. The system may be used for grid feeding and islanding/ microgrids via advanced grid support functions and photo-voltaic (PV) self-consumption optimization.

The xStorage 250-1000 is intended for various energy storage market segments, inclusive of commercial buildings, industrial facilities, microgrids, and electrical vehicle charging infrastructure (EVCI).

Figure 1. Eaton xStorage 250–1000 System

1.1.1 Battery Energy Storage System (BESS)

The xStorage 250-1000 is a modular multi-part battery energy storage system (BESS) comprised of the bidirectional inverter, batteries, and control cabinet. The system is outdoor rated and protected by individual weathertight enclosures designed for corrosion resistance.

The control cabinet is comprised of an IP66 outdoor enclosure integrated with a NEMA 3R outdoor rated auxiliary transformer.

1.1.2 Power Conversion System

The power conversion system (PCS) is the EPC Power CAB1000 bi-directional inverter, capable of providing the required output to the load. The inverter is designed to run in parallel with the incoming utility to supplement the customer load. The inverter is housed in a standalone IP55 & Type 3R rated cabinet.

When charging, the inverter directs energy from the utility to charge the battery system. During high loading events, the inverter converter converts DC energy from the batteries to AC power to supplement the utility load.

The inverter system communicates with the battery cabinets via the energy management system (EMS), also known as the Global Stored Energy Controls (GSEC), through Modbus communication.

1.1.3 Battery Cabinet System

Energy storage is provided by the CATL EnerOne+ outdoor lithium-ion battery cabinet system. The battery system is comprised of up to eight battery cabinets depending on power needs. Each cabinet contains eight modules. The batteries are monitored and controlled by the CATL main battery management unit (MBMU) and secondary battery management unit (SBMU).

The CATL EnerOne+ system is rated to IP56 and supports standalone outdoor usage.

NOTICE

During SBMU communication fault, the system will continue to operate with limited battery capacity and just a warning on the system.

1.1.4 Cooling and Heating

Each enclosure comprising the BESS is cooled separately.

The battery system utilizes a liquid cooled chiller to maintain operating temperature. The chiller regulates the temperatures of all battery modules and is located in the control section of each cabinet.

The inverter utilizes a hybrid air to liquid heat exchanger and unconditioned external air system to cool critical components. The heater exchanger assembly is located on the rear door, while the unconditioned air intake is drawn through a series of fans in the front section of the inverter. The unconditioned air is filtered by a two-part IP rated filter.

The control cabinet temperature is maintained by a door-mounted HVAC unit and two internal heaters. The HVAC unit, auto-fan design of the heaters, and internal design of the control cabinet recirculate air to maintain all component temperatures within their respective operating limits. The heater operation is intended for low ambient temperatures.

1.1.5 Digital Dashboard

The dashboard provided by Eaton **Remote Monitoring™** offers 24x7 insight into the health of the xStorage 250-1000 system. The dashboard will offer information and control for the system, including:

- System-level status, alarms, and telemetry
- Ability to view and change energy service configuration parameters
- Automatic critical safety alarm notification to local fire station operators

1.2 Using This Manual

This manual describes how to install and operate the Eaton xStorage 250-1000. Read and understand the procedures described in this manual to ensure trouble-free installation and operation.

The information in this manual is divided into sections and chapters. The system, options, and accessories being installed dictate which parts of this manual should be read. At a minimum, Chapter 1 *Introduction* through Chapter 7 *BESS Operating Instructions* should be examined.

Read through each procedure before beginning the work.

1.3 Conventions Used in This Manual

In this manual, the term xStorage 250-1000 refers to the system as a whole, inclusive of the batteries, inverter, and control cabinet.

This manual uses these type conventions:

- **Bold type** highlights important concepts in discussions, key terms in procedures, and menu options, or represents a command or option that you type or enter at a prompt.
- *Italic* type highlights notes and new terms where they are defined.
- `Screen type` represents information that appears on the screen or LCD.

Icon	Description
Note	Information notes call attention to important features or instructions.
[Keys]	Brackets are used when referring to a specific key, such as [Enter] or [Ctrl].

1.4 Symbols, Controls, and Indicators

RISK OF ELECTRIC SHOCK - Observe the warning associated with the risk of electric shock symbol.

CAUTION: REFER TO OPERATOR'S MANUAL - Refer to your operator's manual for additional information, such as important operating and maintenance instructions.

This symbol indicates that you should not discard waste electrical or electronic equipment (WEEE) in the trash. For proper disposal, contact your local recycling/reuse or hazardous waste center.

1.5 For More Information

Refer to the Eaton xStorage 250-1000 kW Service Manual for the following advanced service-level information:

- Battery system installation instructions, start-up processes, sub-assembly removal and replacement.
- Procedures, wiring, and safety information.
- Detailed illustrations of the cabinet, connection point drawings and detailed schematics.

NOTE The Eaton xStorage 250-1000 kW Service Manual is made available to customer service engineers and authorized service technicians after completing the Eaton xStorage 250-1000 Product Service Training.

Visit https://www.eaton.com/us/en-us/products/energy-storage.html or contact an Eaton service representative for more information.

1.6 Getting Help

If help is needed with any of the following:

- Scheduling initial startup
- Regional locations and telephone numbers
- A question about any of the information in this manual
- A question this manual does not answer

Please call the Customer Reliability Center at:

United States:	**1-800-843-9433** or **1-919-870-3028**
Canada:	**1-800-461-9166 ext 260**
All other countries:	Call your local service representative

Please use the following e-mail address for manual comments, suggestions, or to report an error in this manual:
E-ESSDocumentation@eaton.com

Chapter 2 Safety Warnings

IMPORTANT SAFETY INSTRUCTIONS - SAVE THESE INSTRUCTIONS

This manual contains important instructions that should be followed during installation and maintenance of the Eaton xStorage 250-1000 kW system. Read all instructions before operating the equipment and save this manual for future reference.

The Eaton xStorage 250-1000 kW system is designed for outdoor usage and contains safety shields behind the front doors of the inverter and control cabinet. The system does not subject users to exposed live components when doors are opened. However, the system is a sophisticated power system and should be handled with appropriate care.

⚠ DANGER

This system contains LETHAL VOLTAGES. All repairs and service should be performed by AUTHORIZED SERVICE PERSONNEL ONLY. There are NO USER SERVICEABLE PARTS inside the Eaton xStorage 250-1000 kW. Doors are to be kept closed and opened by AUTHORIZED SERVICE PERSONNEL ONLY.

⚠ WARNING

- The xStorage 250-1000 kW system is powered by its own energy source (batteries). The output terminals may carry live voltage even when the system is disconnected from an AC source.
- As a result of the connected loads, high leakage current is possible. Connection to earth ground is required for safety and proper product operation. Do not check xStorage 250-1000 kW system operation by any action that includes removal of the earth (ground) connection with loads attached.
- Ensure all power is disconnected before performing installation or service.
- ELECTRIC ENERGY HAZARD. Do not attempt to alter any battery wiring or connectors. Attempting to alter wiring can cause injury.
- Do not open or mutilate batteries. Released electrolyte is harmful to the skin and eyes. It may be toxic.

Chapter 3 BESS Installation Plan and Unpacking

Use the following basic sequence of steps to install the Eaton xStorage 250-1000:

1. Create an installation plan for the xStorage 250-1000.
2. Selecting an Isolation Transformer.
3. Prepare your site for the xStorage 250-1000.
4. Inspect and unpack the system level components:
   a. Battery cabinets 1-8
   b. Inverter
   c. Control Cabinet
5. Install the xStorage 250-1000 system level components in acceptable pre-determined layout.
6. Wire the system.
7. Complete the Installation Checklist.
8. Have authorized service personnel perform preliminary operational checks and start up the system.

3.1 Creating an Installation Plan

Before installing the xStorage 250-1000, read and understand how this manual applies to the system being installed.

Use the procedures and illustrations in Section 3.3 *Preparing the Site* and Chapter 4 *System Installation* to create a logical plan for installing the system.

3.2 Selecting an Isolation Transformer

The xStorage 250-1000 must be installed with a Wye-Delta 480:480 isolation transformer upstream of the inverter. The following parameters shall be met:

- The isolation transformer must have an ungrounded secondary winding (side facing the inverter) to generate floating AC voltages/IT grid for the inverter.
- An electrostatic shield between the primary and secondary windings must be included in the transformer, i.e., the transformer must be a “drive duty” transformer.
- The isolation transformer must be dedicated to serve only the inverter.
- No other loads than the inverter(s) are allowed to be galvanically connected to the secondary side of the transformer.

NOTICE

The isolation transformer primary Wye neutral must be permanently bonded to the upstream utility transformer secondary Wye neutral "or grounded locally"

See the following table for isolation transformer sizing and specification:

Table 1. Isolation Transformer Sizing

System Power (kW)	Transformer Rating (kVA)
1000	1200
800	1000
700	1000
500	750
350	500
250	300

Input Transformer Requirements:

- 480Y/277 Pri. - 480V Delta Sec.
- Isolation Transformer
- Taps 2 @ +2.5%, 2 @ -2.5%
- 150C Rise Dry Type, 65C Oil-Filled
- Electrostatic Shield

3.3 Preparing the Site

3.3.1 Environmental Considerations

The xStorage 250-1000 is intended for outdoor installations only.

Make sure that the environment for the xStorage 250-1000 meets the following operating restrictions:

- Outdoor temperatures as specified in Section 10.4 *Environmental Specifications*.
- The xStorage 250-1000 shall not be installed in a location where it is exposed to floodwater.
- The xStorage 250-1000 shall not be installed in a location where it is exposed to saltwater spray or marine environments.

3.3.2 Installation Considerations and Exposures

The xStorage 250-1000 must be installed on a level concrete pad suitable for the weight of the system. Level deviation of the concrete pad shall be less than or equal to +/- 10mm and may not exceed a slope of 0.5% within the component footprints. The flatness deviation shall be less than or equal to +/- 4mm per 2 meters within the component footprints.

The xStorage 250-1000 installation site must meet the maximum weight requirements shown in Table 2 below, dependent on the number of required battery cabinets.

The xStorage 250-1000 is a multi-part BESS and supports varied orientation of components. The installation site must meet minimum component clearances and dependencies outlined in Figure 2 through Figure 8. All dimensions in IN [MM].

The xStorage 250-1000 has not been tested for exposure to seismic activity. The xStorage 250-1000 has been evaluated by way of simulation with the intent to pass *ICC-ES AC156 Acceptance Criteria for Seismic Qualification by Shake-Table Testing of Nonstructural Components and Systems.*

The xStorage 250-1000 control cabinet contains a roof mounted fire alarm and antenna. The fire alarm must be visible from multiple directions on the installation site. The antenna must not be obstructed by other site components.

NOTICE

The battery racks must be periodically charged and balanced in the event of an extended storage period and must be stored indoors within proper temperature and humidity ranges prior to installation. Do not exceed 5 months of storage prior to commissioning.

The battery racks must be stored in a place without harmful gases, flammable or explosive products, and corrosive chemicals nearby. Keep away from mechanical impact, heavy pressure, and strong magnetic fields.

Exposures

The xStorage 250-1000 shall be separated by a minimum of 10 feet (3048 mm) from the exposures below as defined by the clearance requirements in NFPA 855. Distance to exposures shall be permitted to be reduced to 3 feet (914 mm) if approved by local AHJ (Authorities Having Jurisdiction) and the fire marshal.

- Lot lines
- Public ways
- Buildings
- Stored combustible materials
- Hazardous materials
- High-piled stock
- Other exposure hazards not associated with electrical grid infrastructure

Areas within 10 feet (3048mm) on each side of the xStorage 250-1000 shall be cleared of combustible vegetation and other combustible growth:

- Single specimens of trees, shrubbery, or cultivated ground cover such as green grass, ivy, succulents, or similar plants used as ground covers shall be permitted to be exempt provided that they do not form a means of readily transmitting fire.

Clearances defined by vegetation requirements in NFPA 855.

Table 2. BESS Component Weight

xStorage 250-1000 Component	Installed Weight kg (lbs)
Control Cabinet (with 1–3 battery racks)	557 (1228)
Control Cabinet (with 4–8 battery racks)	TBD
Inverter	1439 (3173)
Battery Cabinet (Each)	3600±110 (7936±242)

Figure 2. xStorage 250-1000 Dimensions (Front View)

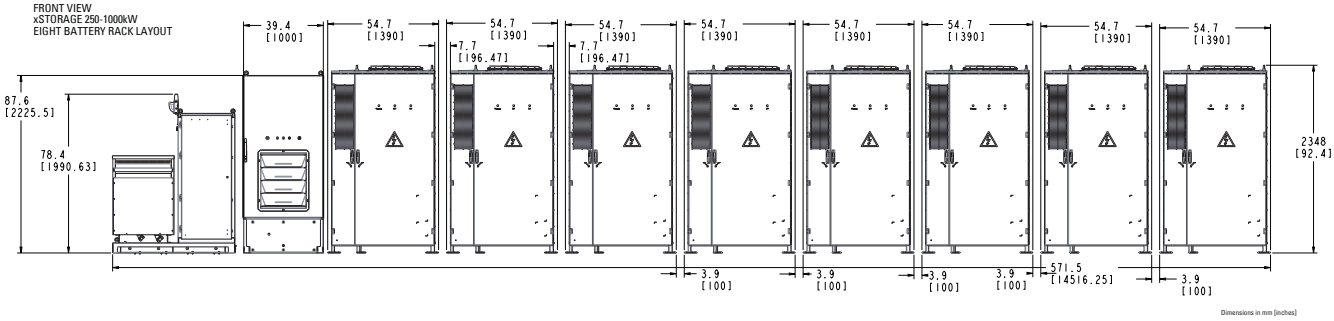

Figure 3. xStorage 250-1000 Dimensions (Right Side View)

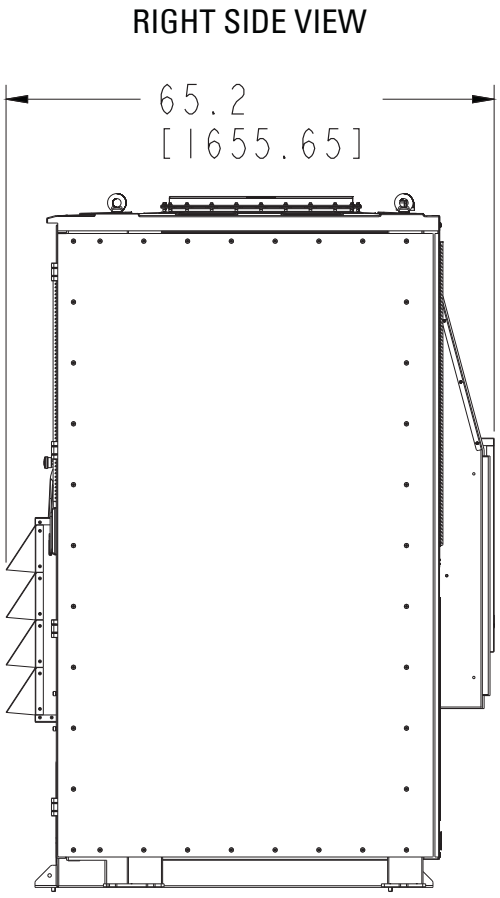

Dimensions in mm [inches]

Figure 4. xStorage 250-1000 Dimensions (Top View)

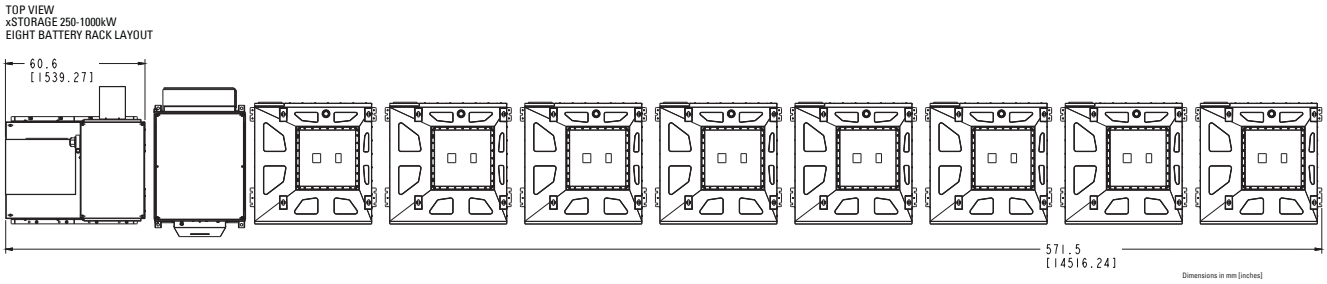

Figure 5. xStorage 250-1000 Dimensions (Bottom View)

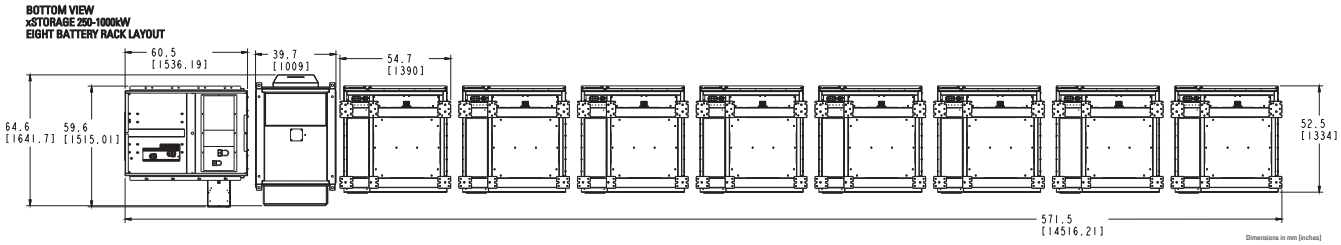

Figure 6. xStorage 250-1000 Component Clearances

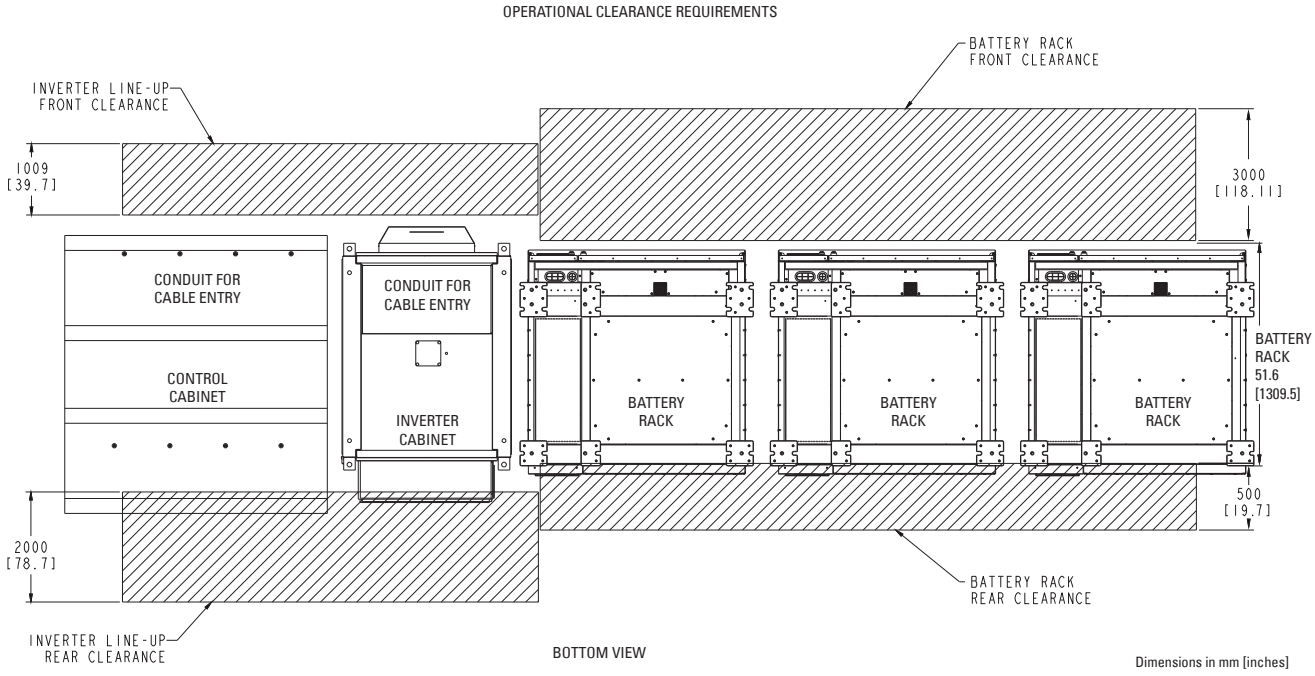

Figure 7. Battery Cabinet Service Clearances

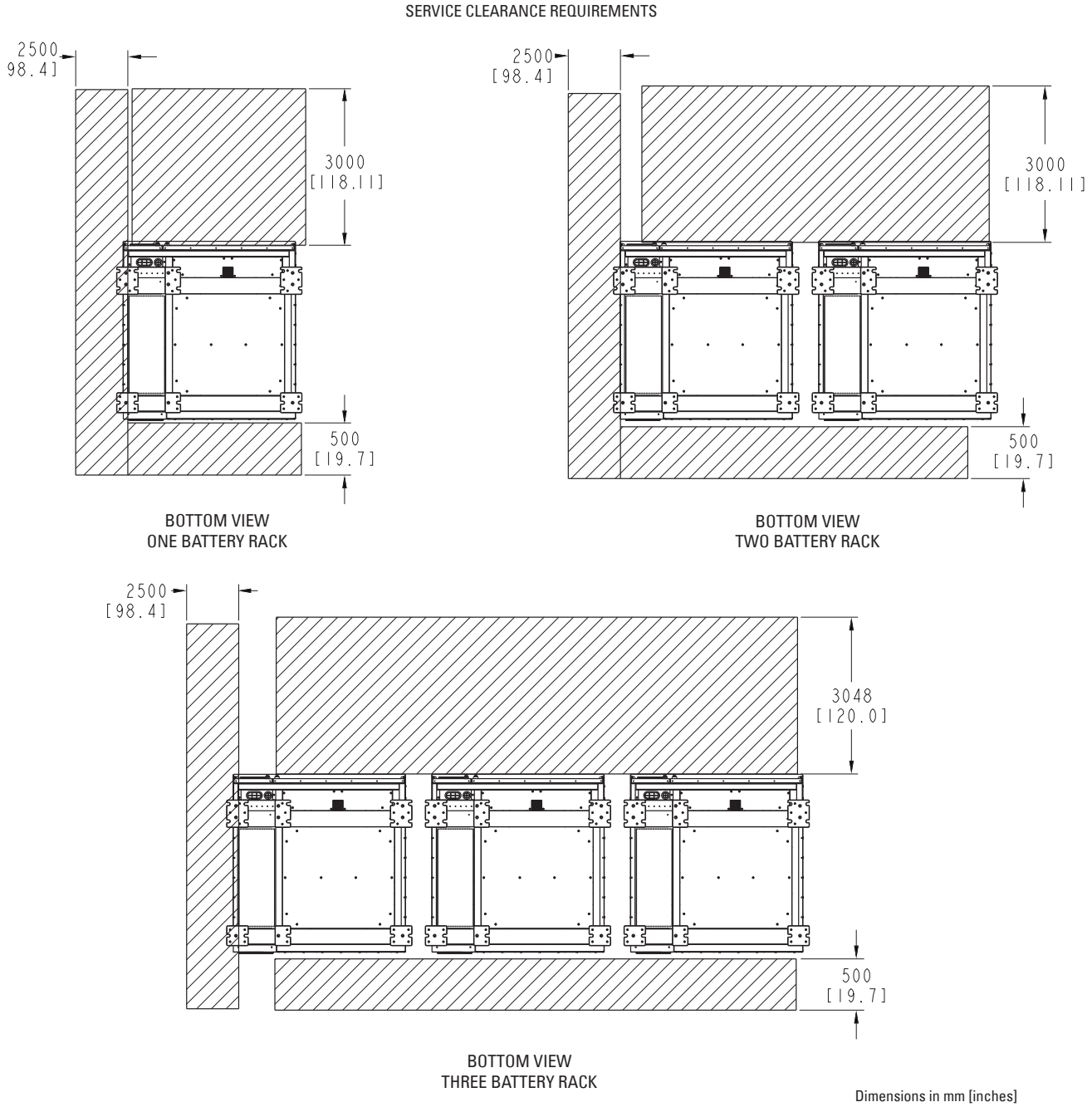

Figure 8. xStorage 250-1000 Service Clearances

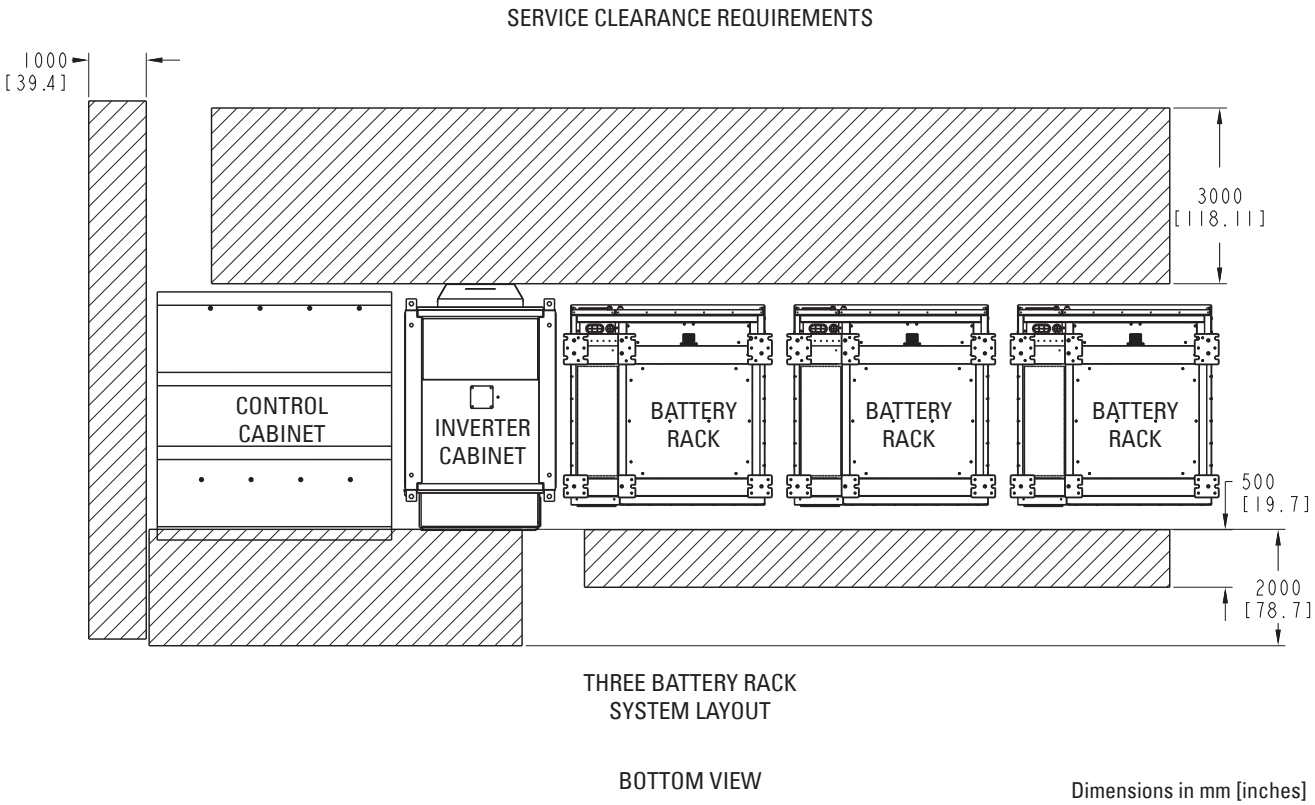

3.3.3 Power Wiring Preparation

Read and understand the following notes while planning and performing the installation:

- Refer to national and local electrical codes for acceptable external wiring practices.
- To allow for future kVA upgrades, consider installing a derated BESS using wiring and external overcurrent protection breakers sized for a fully rated BESS.
- For AC power wiring, use 75 °C copper wire. Wire sizes listed in Table 3 are for copper wiring only.
- Wire ampacities are chosen from Table 310-16 of the National Electrical Code® (NEC®). Specification is for copper wire with a 75 °C rating and de-rated for 50 °C ambient temperature.
- For DC power wiring, use #3/0 AWG 2000V 105 °C rated type XLPE copper wire equivalent to: manufacturer ADC part number 30302NPV_ET. See Chapter 8 *Schematics and Site Plans* site plan drawings Table B, Figure 96 Table G, and Figure 100 Table H for additional details.
- DC power wire size is limited by the HV connector provided with the battery cabinet to terminate the DC power cable. The crimp HV connector accepts a max wire size of #3/0 AWG with outside insulation diameter of 17 to 18 mm. Reference Recodeal p/n REA4-WTDO-95-A (orange) and REA4-WTAB-95-A (black) High voltage connector installation instructions for crimp termination of battery cabinet DC power wires.
- An isolation transformer is required on the input of the Power Conversion System (PCS). The transformer configuration required is primary 480Y/277 and secondary 480 delta, with electrostatic shield between the primary and secondary. Install the transformer grounded Y primary facing the grid and delta secondary

facing the PCS input. See Section 3.2 *Selecting an Isolation Transformer* for isolation transformer specifications.

- Material and labor for external wiring requirements are to be provided by designated personnel.

Table 3. 480V Power Ratings and External Wiring Recommendations

Basic Unit Rating	**Units**	**480Vac, 3Ph/3W, 60Hz**							
	kW	**1000**	**950**	**900**	**850**	**800**	**750**	**700**	**650**
AC Main Power Full load current	Amps	1203	1143	1083	1022	962	902	842	782
Minimum Conductor Size	AWG or kcmil	500	500	500	500	500	500	500	500
Number per Phase	(each)	5	5	5	5	4	4	4	4
Basic Unit Rating	**Units**	**480Vac, 3Ph/3W, 60Hz**							
	kW	**600**	**550**	**500**	**450**	**400**	**350**	**300**	**250**
AC Main Power Full load current	Amps	722	662	601	541	481	421	361	301
Minimum Conductor Size	AWG or kcmil	500	500	500	350	350	350	350	350
Number per Phase	(each)	3	3	3	3	3	2	2	2

Table 4. DC Power Ratings and External Wiring Recommendations

Battery Cabinet Basic Unit Rating	**Units**	**Nominal 1331.2 VDC**
	kW	250 thru 1000
DC Power Full load current	Amps	30C Ambient = 263A 50C Ambient = 226A (Note A)
Conductor Size	AWG or kcmil	3/0
Number per Pole (+) & (-)	(each)	1
Note A) Max per battery cabinet DC Amps based on 3/0 XLPE 105C direct burial cable ampacity according to NEC tables 690.31(A)(3)(1) and 690.31(A)(3)(2) for ambient temperature of 30 °C & 50 °C. Burial of cable/conduit may be required to meet 30 °C ambient temperature.		

NOTICE

- Install DC power cables, AC power cables and control cables in different conduit.
- Battery DC HV cable length difference between the longest and shortest run shall not exceed 5 meters.
- Control cables need to be installed at least 500 mm (20 in) away from the power cables.
- If control cables cross power cables it must be in 90° angle to the power cables.
- Conduit sizes were chosen from NEC Table 4, Electrical Metallic Tubing (EMT). See Table 5 for conduit requirements.
- Per NEC article 300, 3(B)(1), all three-phase conductors must be run in the same conduit.
- Conduit is sized to accommodate one ground conductor sized in accordance with NEC Table 250.122.
- Conduit sizes listed are for copper wiring only.

Table 5. Power Cable Conduit Requirements

Model (kW)	**Terminal**	**Number of Wires**	**MIN. Conduit Trade Size**	**Number of Conduits**
850 thru 1000	AC Main Power	4	3.0	5
650 thru 800		4	3.0	4
400 thru 600		4	3.0	3
250 thru 350		4	3.0	2
250 thru 1000	DC Power	3	2.0	1 per battery cabinet

Table 6. Recommended BESS Feeder Circuit Breaker Ratings

Recommended SUB, CB1 and MX2* Circuit Breaker Ratings (100% & 80% breaker rating)								
Breaker %	**Model (kW)**							
	1000	**950**	**900**	**850**	**800**	**750**	**700**	**650**
100	1600A	1200A	1200A	1200A	1000A	1000A	1000A	1000A
80	1600A	1600A	1400A	1400A	1200A	1200A	1200A	1200A
Breaker %	**Model (kW)**							
	600	**550**	**500**	**450**	**400**	**350**	**300**	**250**
100	800A	700A	700A	600A	500A	500A	400A	350A
80	1000A	900A	800A	700A	600A	600A	500A	400A
* OPTIONAL MX2 BREAKER ONLY REQUIRED FOR GRID FORMING APPLICATIONS.								

Table 7. Recommended CB2 Circuit Breaker Rating

Breaker %	**Bridge Cabinet Part Number**	
	P-103004900	P-103005650
100	50A	80A
80	60A	100A

Table 8. Inverter External Power Cable Terminations

Termination	**Max Qty of Termina-tions**	**Lug Type**	**Bolt Pattern**	**Torque Nm (lb ft)**	**Voltage Rating**
AC Input/Output Wires (Per Phase)	6	COMPRESSION 600 MCM MAX	NEMA 2 HOLE	76 (56)	600 VAC
DC Wires from Battery (Per Pole)	8	COMPRESSION 3/0 AWG (Note 1)	NEMA 2 HOLE	76 (56)	1500 VDC
Ground Wires	14	COMPRESSION 600 MCM MAX	SINGLE HOLE 12 MM DIA.	22 (16)	
Note 1: DC wire size is limited by the HV connector provided with the battery cabinet to terminate the DC power wire. The crimp HV connector accepts a max wire size of #3/0 AWG with outside insulation diameter of 17 to 18 mm.					

Table 9. Battery Cabinet External Power Cable Terminations

Termination	Max Qty of Termina-tions	Lug Type	Bolt Pattern	Torque Nm (lb ft)	Voltage Rating
DC Wires to Inverter (Per Pole)	1	SANCO ES095 3/0 AWG (Note 1)	N/A	N/A	1500 VDC
Ground Wire	1	COMPRESSION ≥ 1/0 AWG	SINGLE HOLE M8 Bolt	10 (7)	
Note 1: DC power wire size is limited by the HV connector provided with the battery cabinet to terminate the DC power cable. The crimp HV connector accepts a max wire size of #3/0 AWG with outside insulation diameter of 17 to 18 mm. Reference SANCO ES095 High voltage connector installation instructions 05-4-035-003 for crimp termination of battery cabinet DC power wires.					

3.3.4 Interface Wiring Preparation

Control and auxiliary power should be connected at the Inverter and control cabinet terminal blocks and to the Amphenol plug connectors included with each battery cabinet.

Read and understand the following notes while planning and performing the installation:

- Reference Figure 93 Table D.
- When installing external interface wiring between the Site Switchboard, Inverter, Control Cabinet and Battery cabinet interface terminals/connectors, conduit must be installed.
- Install the interface wiring in separate conduit from the power wiring.
- Battery CANBUS communication cable from control cabinet to last battery cabinet 120Ω termination resistor can be no more than 30 meters. If longer than 30 meters a suitable CAN control device is required. Communication cable is required to be shielded twisted pair with single shield ground point.
- Battery DC HV cable length differences between the longest and shortest run shall not exceed 5 meters
- Recodeal plug connector JXH1 and Jonhon plug connector JX1 and JX2 are provided with each battery cabinet for connections to each battery cabinet JXH1, JX1 and JX2 receptacles. For details on control connector terminations at each battery cabinet, see manual addendum XREF 'JXH1 4 Pin Plug Connector Instructions' for JXH1 and 'JX1 & JX2 16 Pin Connector User Manual' for JX1 and JX2.
- Site Meter Current Transformers (CT1) must be installed and wired to be 'viewed as a load' - positive power implies importing from grid. Orient the CT with ‘H1’ side facing the Grid connection.
- BESS Meter Current Transformers (CT2) must be installed and wired to be 'viewed as a source' - positive power implies discharging. Orient the CT with ‘H1’ side facing the Inverter connection.

3.4 Inspecting and Unpacking the BESS

1. Carefully inspect the outer packaging for evidence of damage during transit.
2. Use a forklift to move the packaged components to the installation site, or as close as possible, before unpacking.
3. Remove the protective covering from the components.
4. Remove the packing material, and discard or recycle in a responsible manner.
5. Inspect the contents for any evidence of physical damage and compare each item with the Bill of Lading. If damage has occurred or shortages are evident, contact an Eaton service representative immediately to determine the extent of the damage and its impact on further installation.

Chapter 4 System Installation

4.1 Preliminary Installation Information

NOTICE

The system shall be installed in accordance with local electrical, building, fire and other codes or utility requirements as applicable to the installation and equipment, by qualified service personnel in accordance with the installation instructions and appropriate practices.

Upon Arrival:

- Inspect component outer surfaces for shipping damages.
- Do not attempt to forklift components after the pallets have been removed.
- The inverter, control cabinet, and batteries must be crane lifted by eyelets indicated in Figure 9. The control cabinet eyebolts unmarked in Figure 9 must NOT be used.
- The radius of the battery cabinet lifting lug is 0.43” (11 mm).

Figure 9. Cabinet Eyebolt Locations

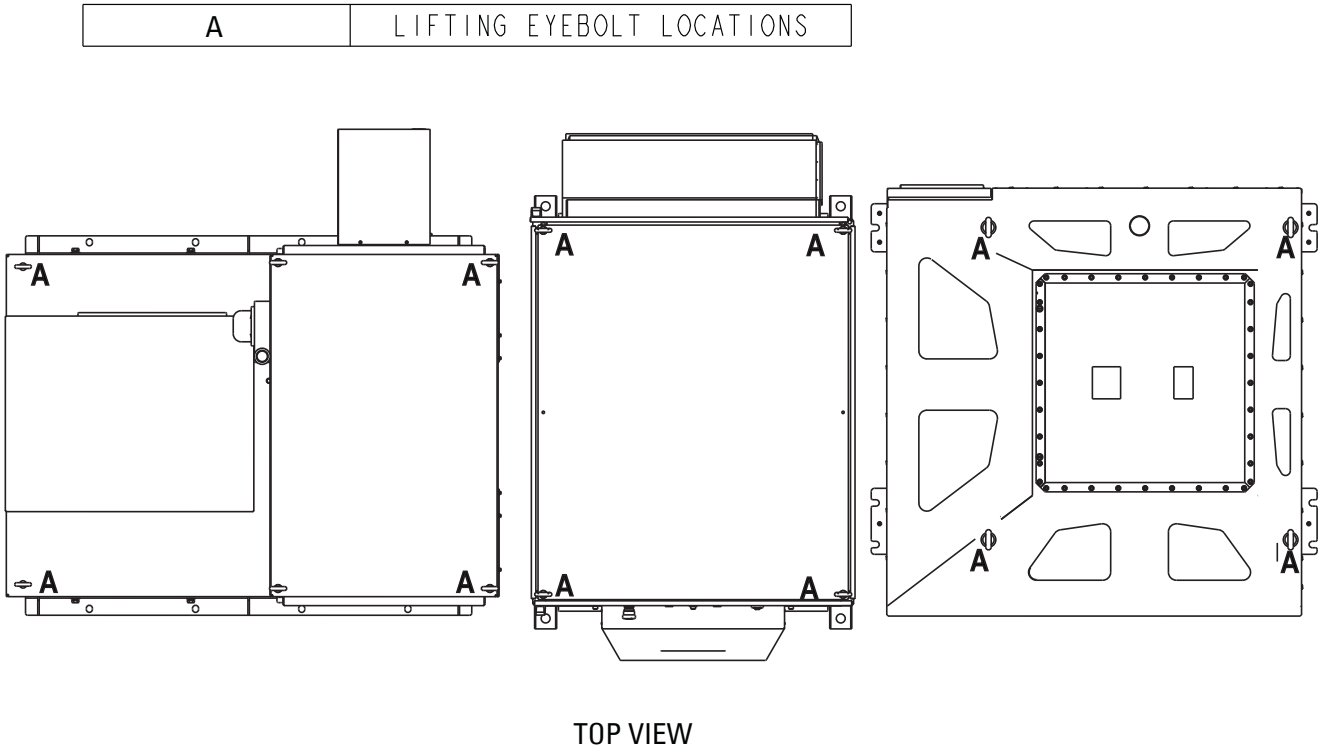

Table 10. Weight and Center of Gravity

Weight and Center of Gravity	Dimensions mm [inch] See Figure 10 and Figure 11				Weight kg [lbs]
		A	B	C	
Control Cabinet & Aux Transformer (1–3 Battery Racks)	1	781.06 [30.8]	568.98 [22.4]	875.03 [34.5]	557.01 [1228.0]
Control Cabinet & Aux Transformer (4–8 Battery Racks)	1	TBD	TBD	TBD	TBD
CAB1000 Inverter	2	600 [23.6]	510 [20.1]	1110.25 [43.7]	1439 [3172.5]
8 Module EnerOne + Battery Rack	3	825 [32.5]	660 [26.0]	1180 [46.5]	3600±110 [7936±242]

Figure 10. Weight and Center of Gravity, Front View

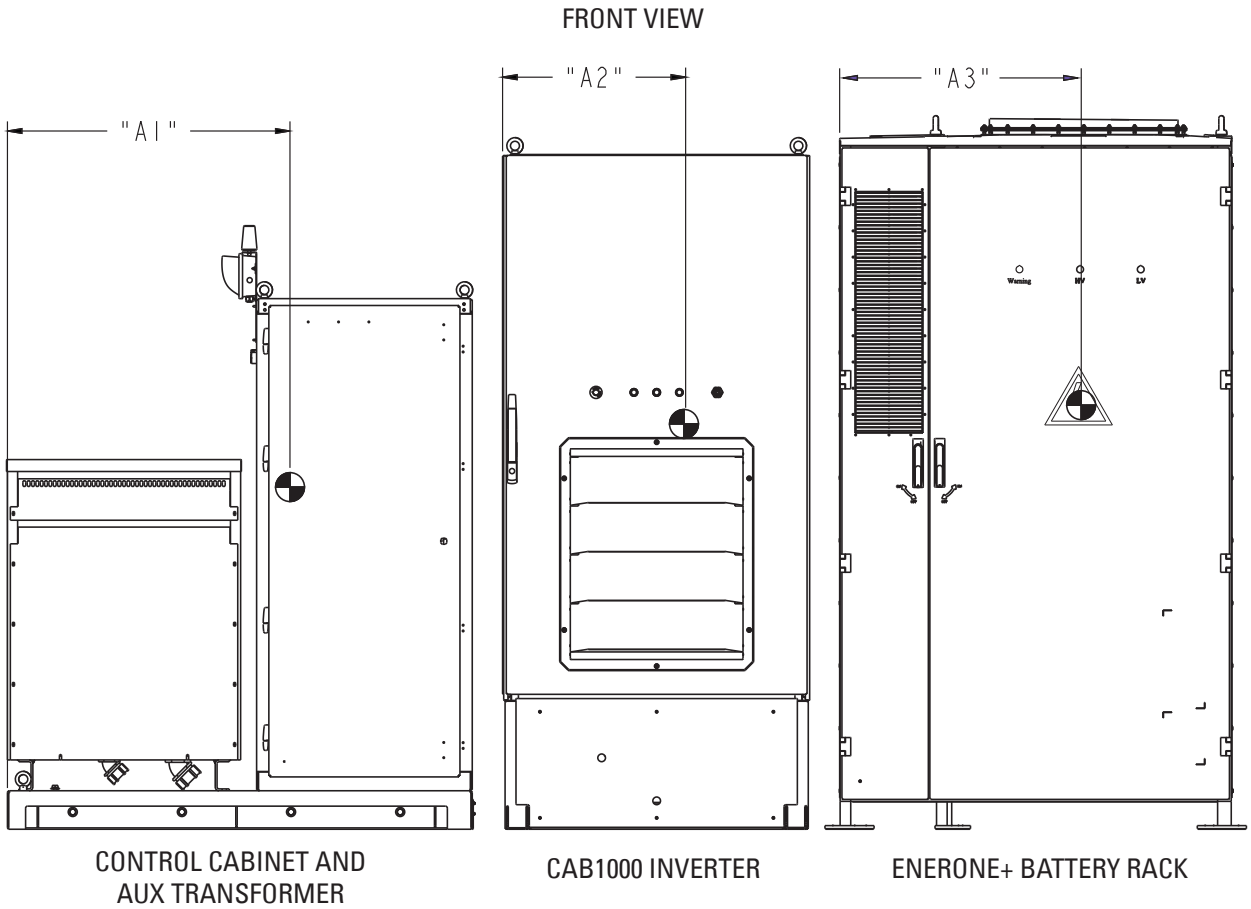

Figure 11. Weight and Center of Gravity, Right Side View

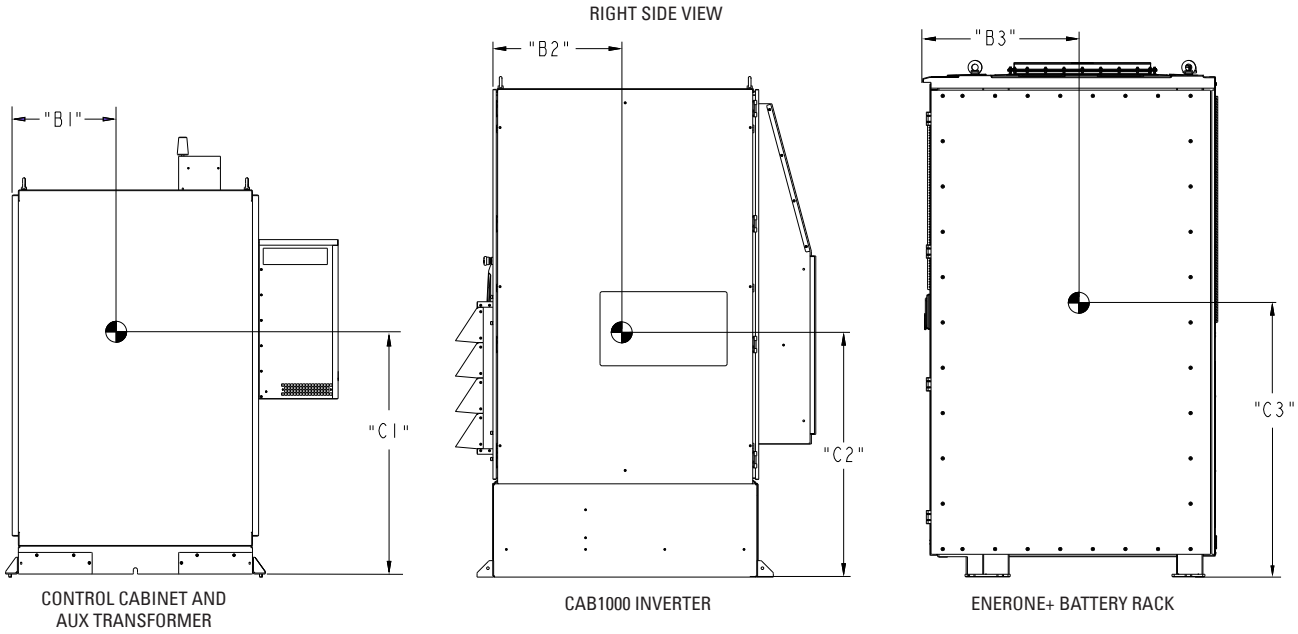

4.2 Battery Cabinet Installation

WARNING

The xStorage battery cabinet is heavy (see Table 2 and Table 10). If unpacking and unloading instructions are not closely followed, the cabinet may tip and cause serious injury.

CAUTION

- Do not tilt the cabinet more than 5° from vertical.
- Must lift the cabinet with a crane, there are no forklift points.
- Install four separate lift lines, one to each eyebolt.
- Side loading can damage the lift points.

To move the battery cabinet and mechanically install on the concrete pad:

1. Inspect the concrete pad location, taking note of the power conduit location and the anchor points. For conduit and anchor locations and dimensions, see Figure 12.
2. See Table 10, Figure 10 and Figure 11 for center of gravity.
3. Carefully align the battery cabinet conduit opening with the exposed conduit in the concrete pad and lower the cabinet onto the concrete pad.

Figure 12. Battery Cabinet Conduit and Anchor Locations

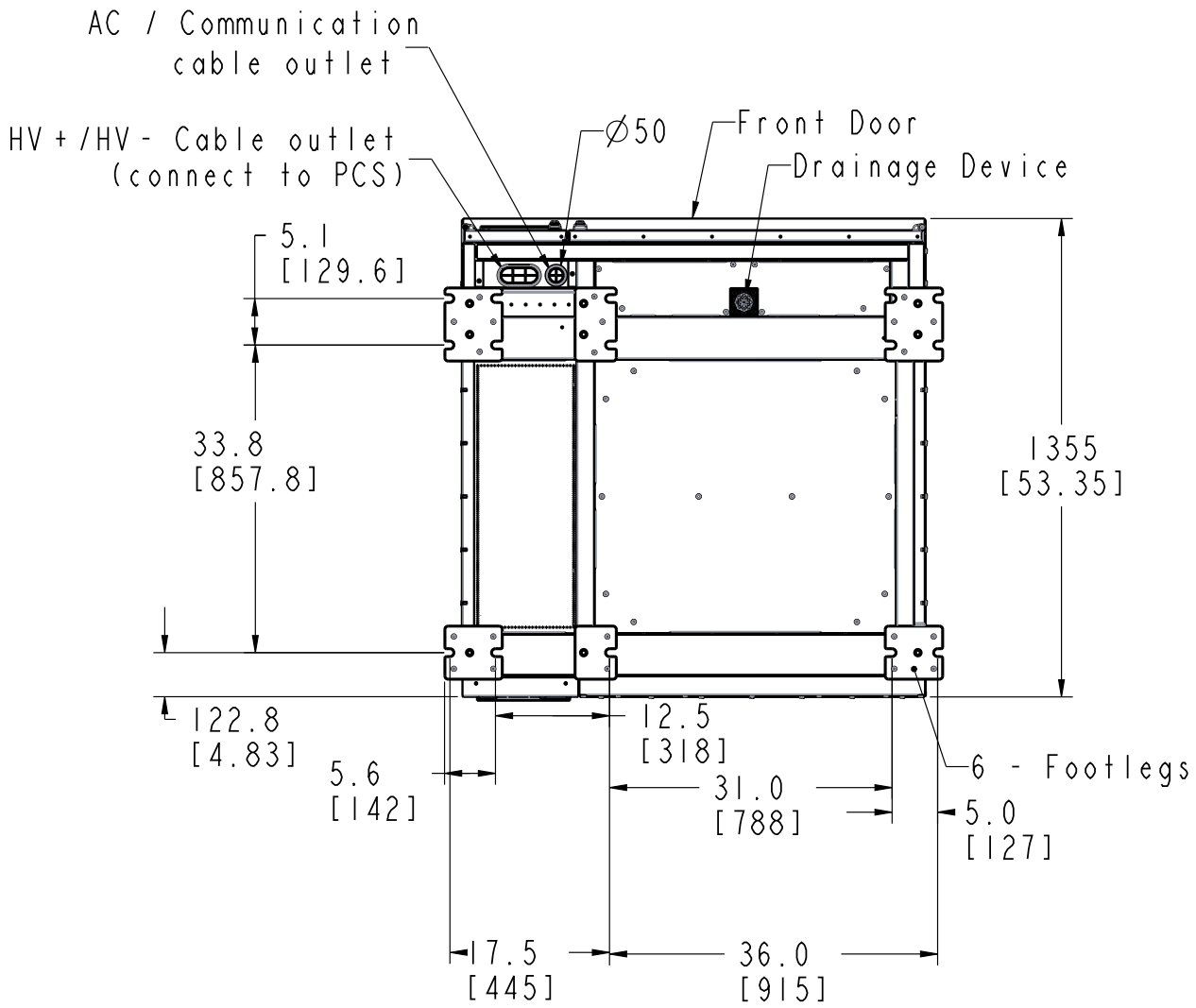

Dimensions in mm [inches]

NOTICE

To anchor the battery cabinet:

- For anchor bolt specifications, see Table 11 and Figure 13 below. Recommended to use Hilti® HVA chemical anchors, the construction of chemical anchors should comply with JGJ 145-2013.
- Fix each anchor point with required anchor bolt, and torque to 150-200 NM.
- Spacing of edge of concrete pad to anchor bolt must comply with selected anchor bolt specification.
- Anchors shall be stainless steel if exposed to wet or damp environments.

Table 11. Battery Cabinet Anchor Bolt Specifications

Chemical Anchor Size	Tensile Bearing Capacity (KN)	Shear Capacity (KN)	L1 (mm)	L2 (mm)	L (mm)
R-M16	34.7	34.6	125	38	163

Figure 13. Battery Cabinet Chemical Bolt Anchor Dimensions

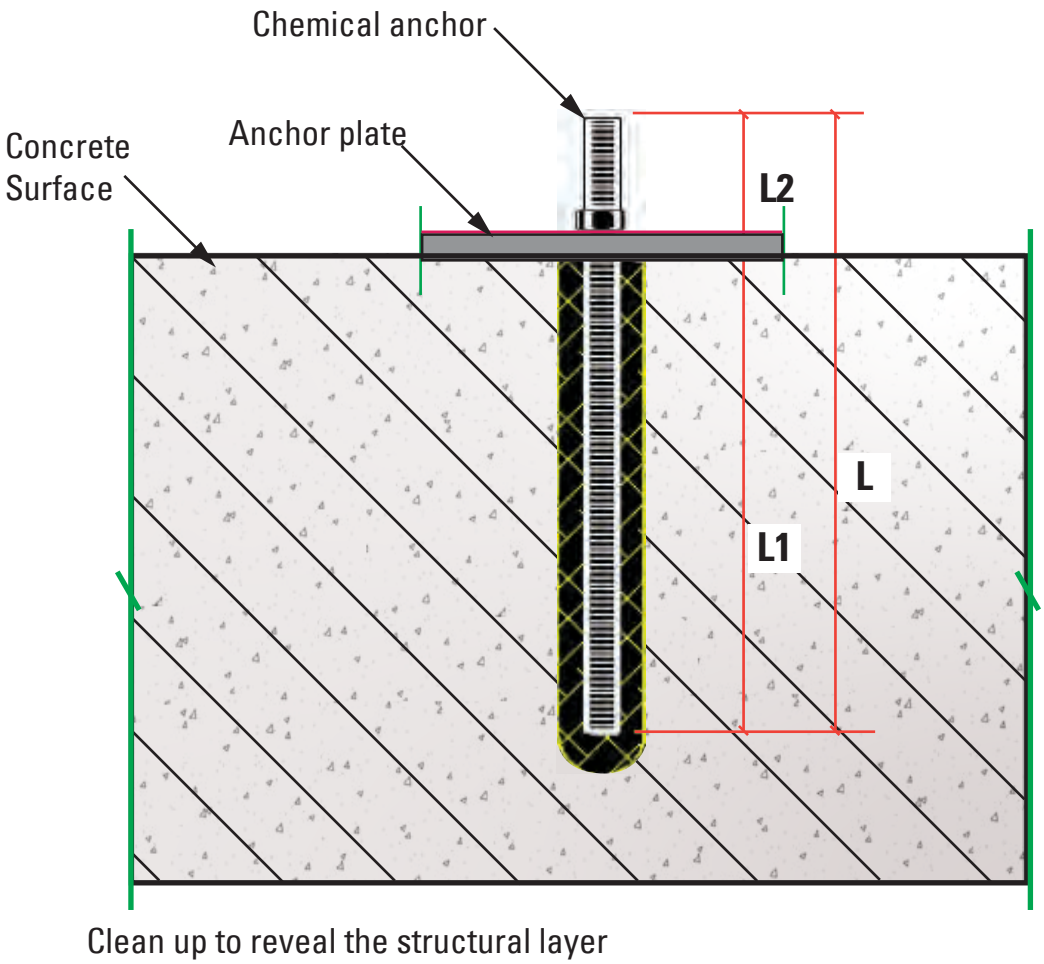

4.3 Inverter System Installation

WARNING

The xStorage inverter is heavy (see Table 2 and Table 10). If unpacking and unloading instructions are not closely followed, the cabinet may tip and cause serious injury.

CAUTION

- Do not tilt the cabinet more than 5° from vertical.
- Must lift the cabinet with a crane, there are no forklift points.
- See Table 10 and Figure 10 for center of gravity.
- Install four separate lift lines, one to each eyebolt.
- Side loading can damage the lift points.

To move the inverter and mechanically install on the concrete pad:

1. Remove the pedestal access panels (kick plate) from the front and rear of the pedestal.
2. Remove the conduit entry floor panel.
3. Carefully align the inverter conduit opening with the exposed conduit in the concrete pad.
4. Lower the cabinet onto the concrete pad.
5. Fasten the inverter to the ground using four pre-installed anchor bolts.
6. Re-install the pedestal access panels and conduit plate once anchored to the concrete pad.

NOTICE

To anchor the inverter:

- Anchor locations are shown in Figure 14 and Figure 15.
- Anchors shall be HILTI® KB-TZ2 or equivalent.
- Anchors shall be 3/4" in diameter and embedded a minimum of 3 3/4" into the concrete pad.
- Distance from anchor to nearest slab edge shall be a minimum of 7 1/4".
- Anchors shall be stainless steel if exposed to wet or damp environments.

NOTICE

Once the conduit entry floor panel is reinstalled, the conduit must be sealed around its outer surface to prevent moisture, dust, air, and debris from entering the cabinet.

Once the power lines are installed and in their final position, any excess space in the conduit must be sealed with an expansion foam or sealant to prevent moisture, dust, air, and debris from entering through the conduit.

- Ensure the chemistry of the foam/sealant used to seal the interior of the conduit is compatible with insulation used in the power cables and the maximum expected temperature of the cables does not exceed that of the degradation temperature of the foam/sealant.

Figure 14. Inverter Anchor Dimensions

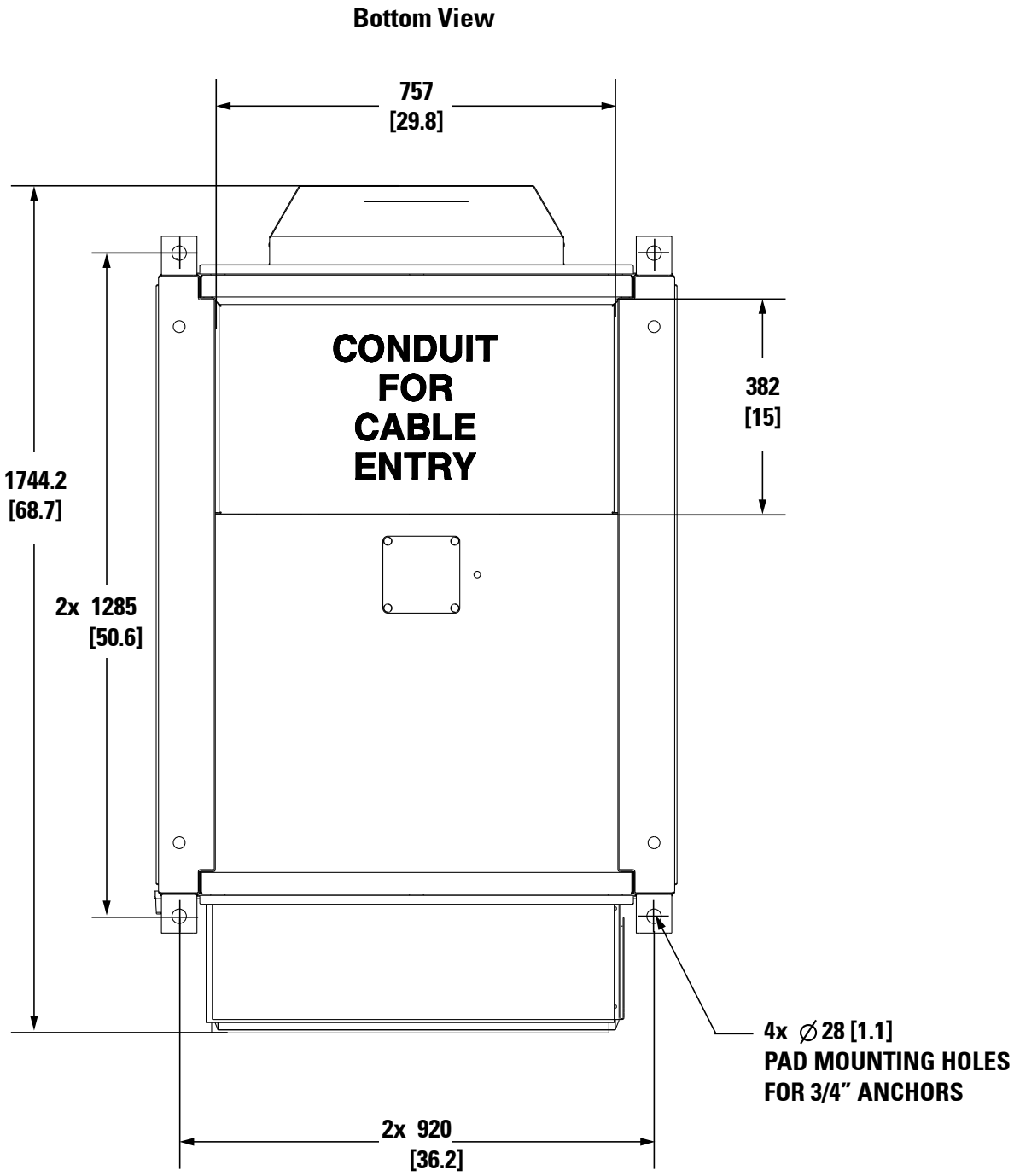

Dimensions in mm [inches]

Figure 15. Inverter Cable Conduit Entry Points

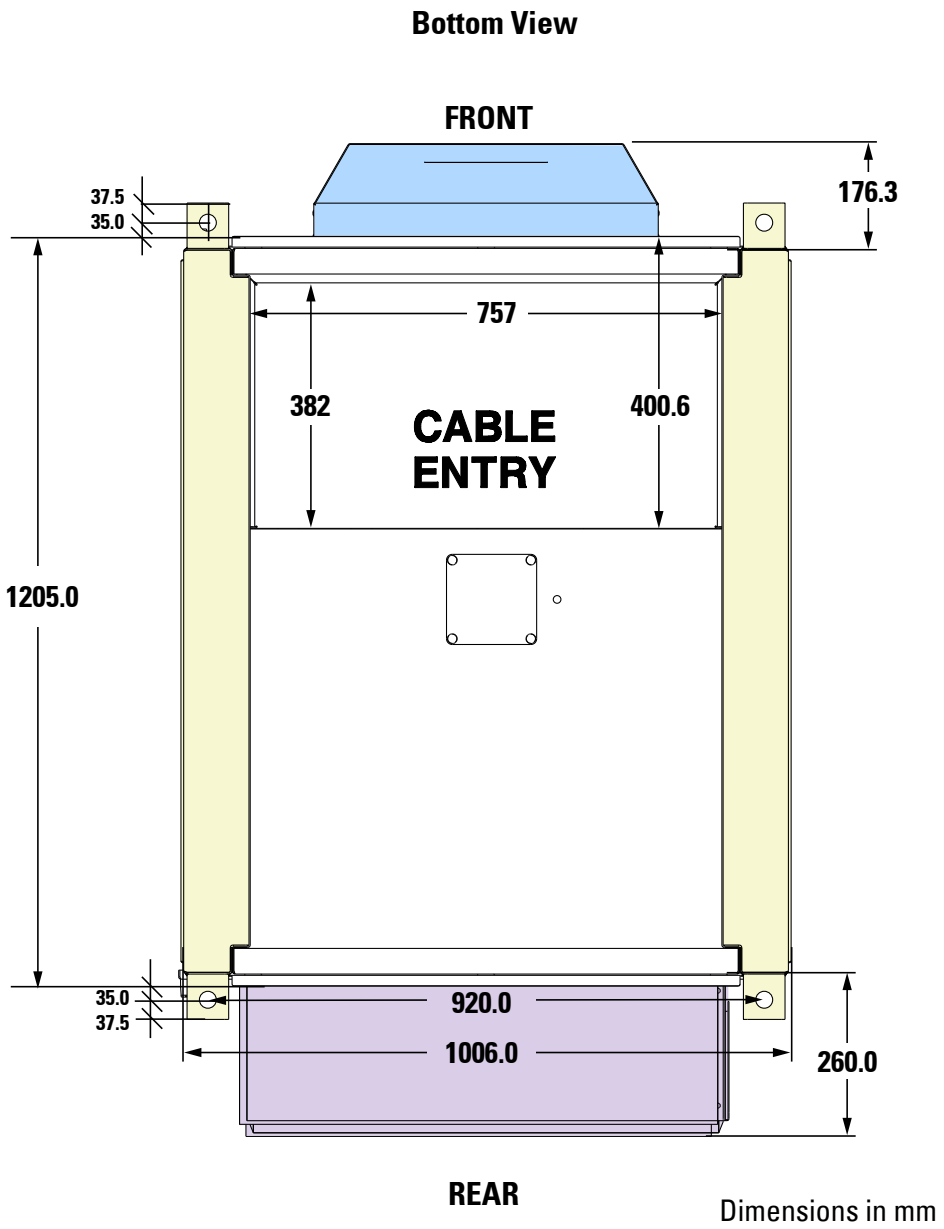

4.4 Control Cabinet Installation

WARNING

The xStorage control cabinet is heavy (see Table 2 and Table 10). If unpacking and unloading instructions are not closely followed, the cabinet may tip and cause serious injury.

⚠CAUTION

- Do not tilt the cabinet more than 5° from vertical.
- Must lift the cabinet with a crane, there are no forklift points.
- See Table 10 and Figure 10 for center of gravity.
- Install four separate lift lines, one to each eyebolt marked in Figure 9.
- Side loading can damage the lift points.

To move the control cabinet and mechanically install on the concrete pad:

1. Remove the primary conduit plate closest to the front door. The secondary conduit plate routed to the auxiliary transformer is shipped permanently mounted.
2. Carefully align the control cabinet conduit opening with the exposed conduit in the concrete pad.
3. Lower the cabinet onto the concrete pad.
4. Fasten the control cabinet to the ground using the anchor specification outlined below.

NOTICE

To anchor the control cabinet:

- Anchor locations are shown in Figure 16 and must be used to fasten the control cabinet to the skid.
- Anchors shall be HILTI® KB-TZ2 or equivalent.
- Anchors shall be 5/8" in diameter and embedded a minimum of 3" into the concrete pad.
- Distance from anchor to nearest slab edge shall be a minimum of 7".
- Anchors shall be stainless steel if exposed to wet or damp environments.

NOTICE

Once the primary conduit entry panel is reinstalled, the conduit must be sealed around its outer surface to prevent moisture, dust, air, and debris from entering the cabinet.

Once the power lines are installed and in their final position, any excess space in the conduit must be sealed with an expansion foam or sealant to prevent moisture, dust, air, and debris from entering through the conduit.

- Ensure the chemistry of the foam/sealant used to seal the interior of the conduit is compatible with insulation used in the power cables and the maximum expected temperature of the cables does not exceed that of the degradation temperature of the foam/sealant.

Figure 16. Control Cabinet Conduit and Anchor Locations

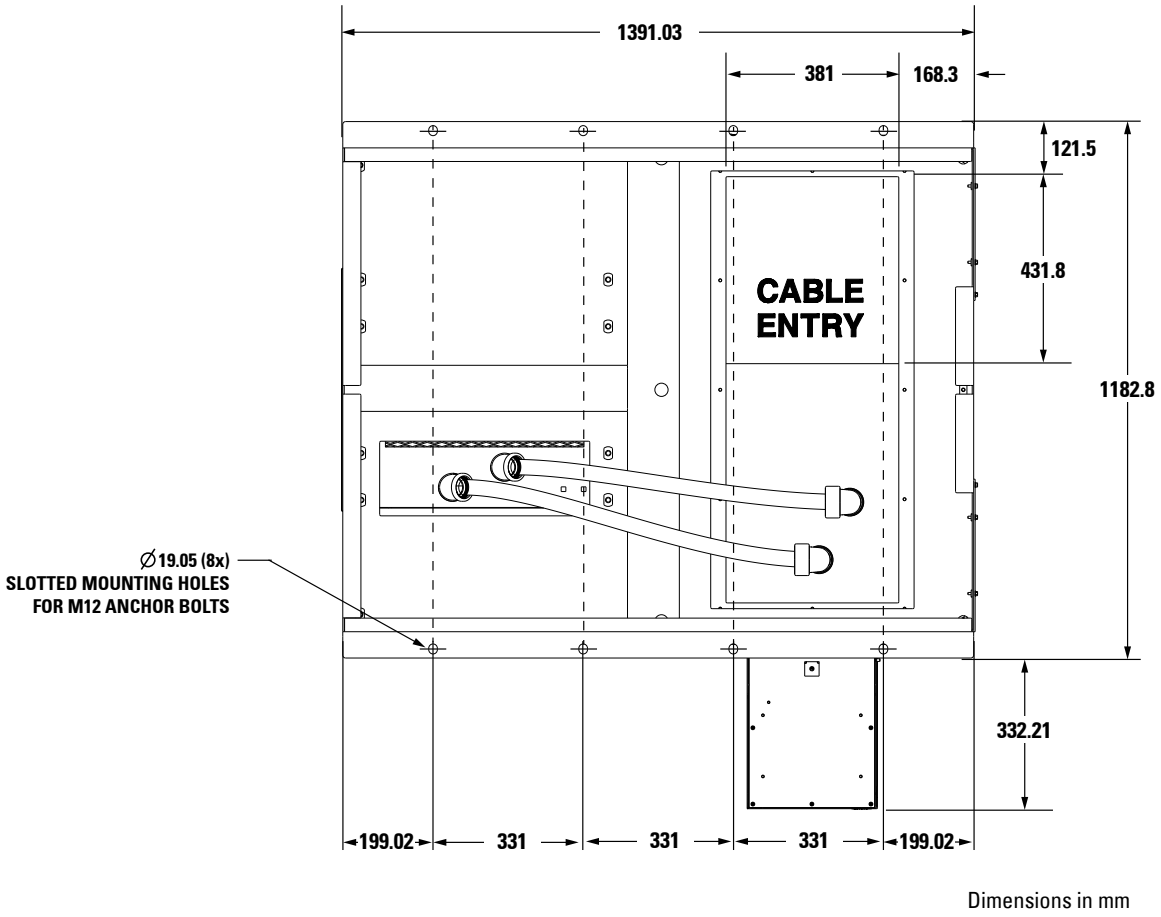

4.5 Installing External Power Wiring

NOTICE

This product has been evaluated for use with copper wire only. Reinforced insulation to the mains is required.

1. Terminate the ground from the isolation transformer to the inverter ground terminal landing using customer provided lugs and hardware. See Section 3.3.3 *Power Wiring Preparation* for wiring and termination requirements. See Figure 17, Figure 18, Figure 19, and Figure 23 for inverter AC power wiring termination locations.
2. Terminate phase A, B and C inverter AC power wiring from the isolation transformer delta output to the inverter L1, L2, L3 terminal landing bus using customer provided lugs and hardware. See Figure 19 for details.
3. Terminate the ground from each battery cabinet to the inverter ground terminal landing using customer provided lugs and hardware.
4. Terminate positive (+) and negative (-) inverter DC power wiring from each battery cabinet to the inverter DC terminal landing (+) and (-) bus using customer provided lugs and hardware. See Figure 20 for details.

5. Terminate ground to battery cabinet ground. See Figure 22 and Figure 23 for Battery cabinet DC power wiring termination locations and supplied connectors.
6. Terminate positive (+) and negative (-) DC power wiring to each battery cabinet at the HV+ and HV- battery cabinet terminals using connectors provided with each battery cabinet.

NOTICE

Battery DC HV cable length difference between the longest and shortest run shall not exceed 5 meters.

Figure 17. Inverter Power Terminal dimensions to left side

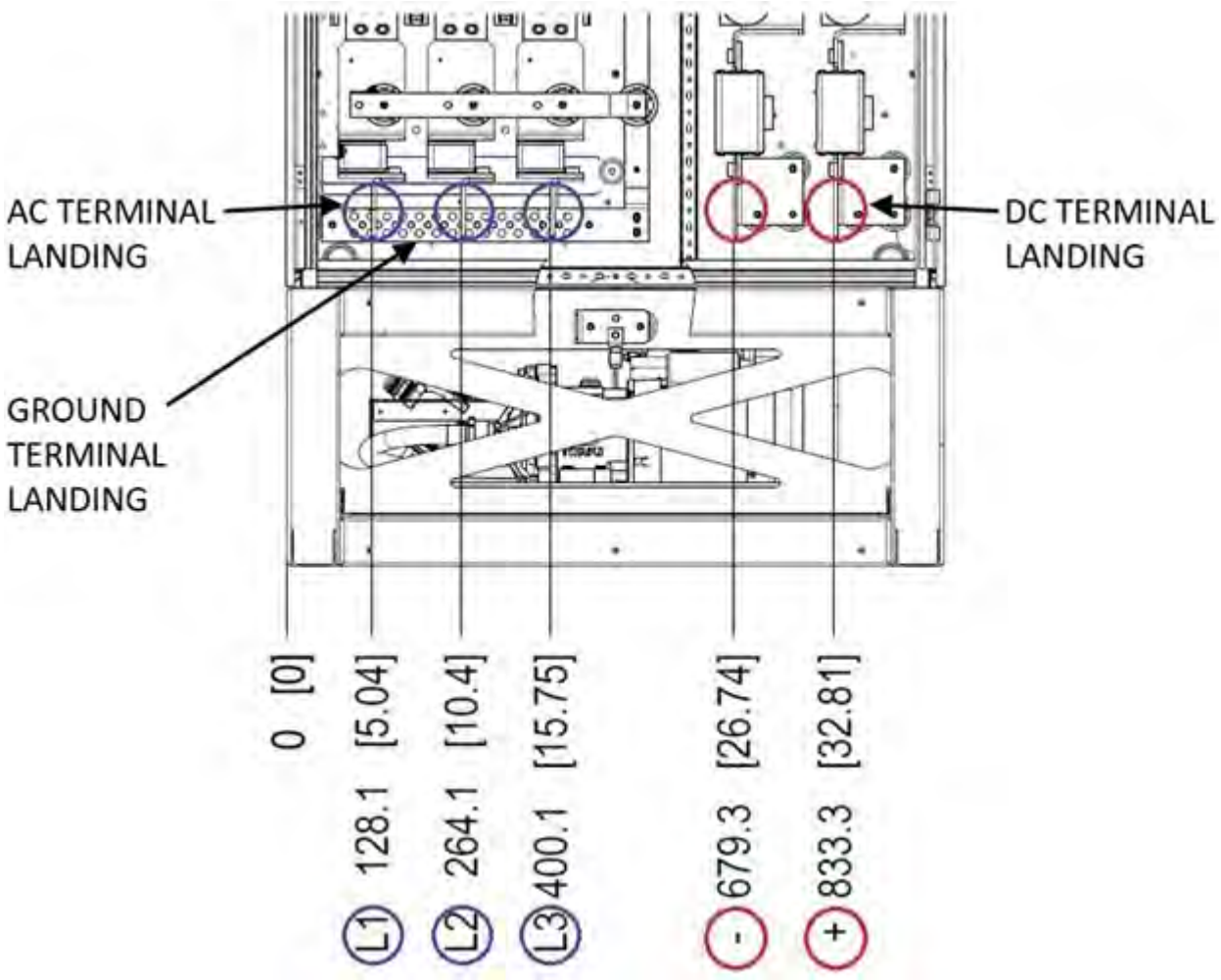

Figure 18. Inverter Power Terminal dimensions to floor

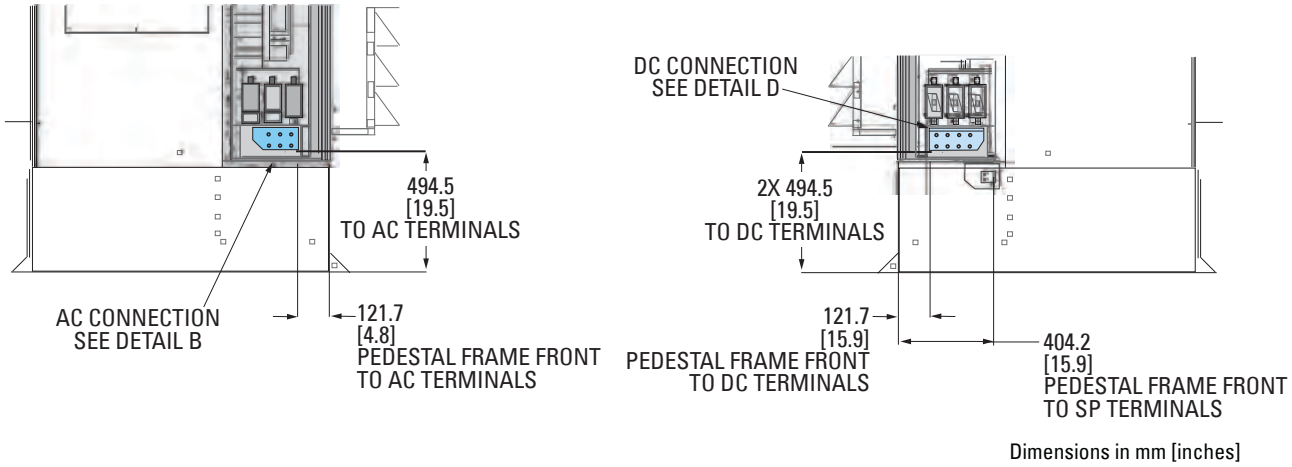

Figure 19. AC Busbar Terminal detail

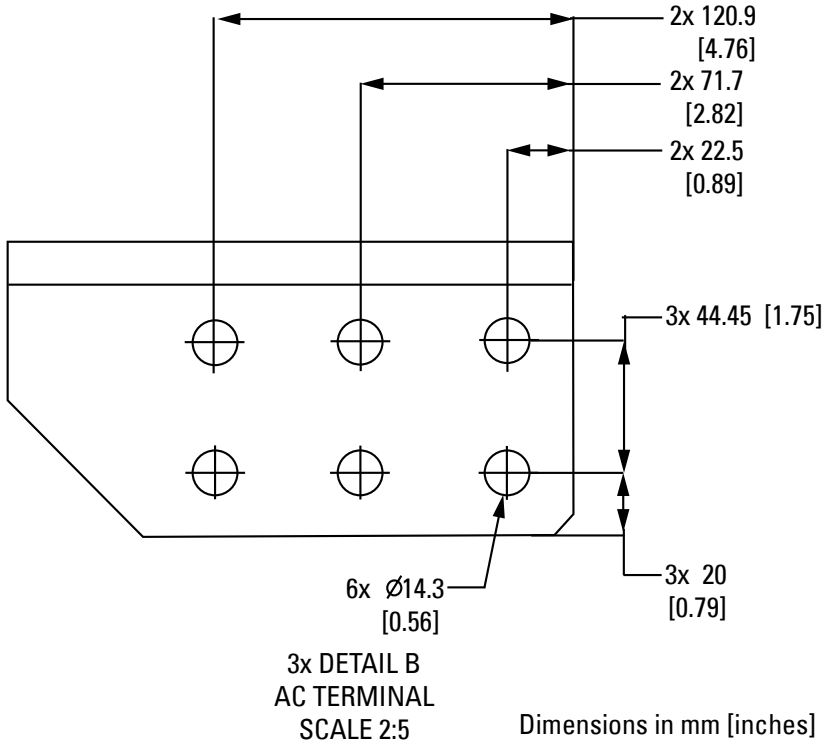

Figure 20. DC Busbar Terminal detail

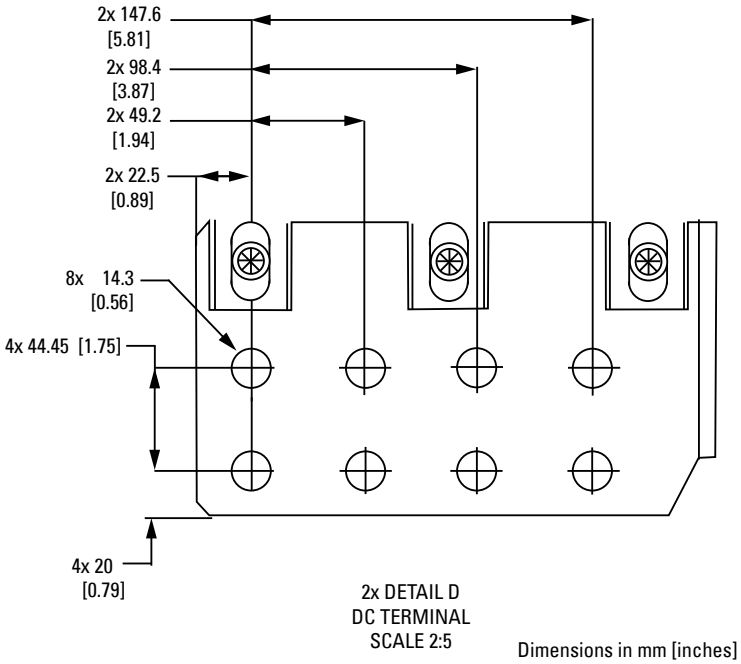

Figure 21. Grounding Terminal detail

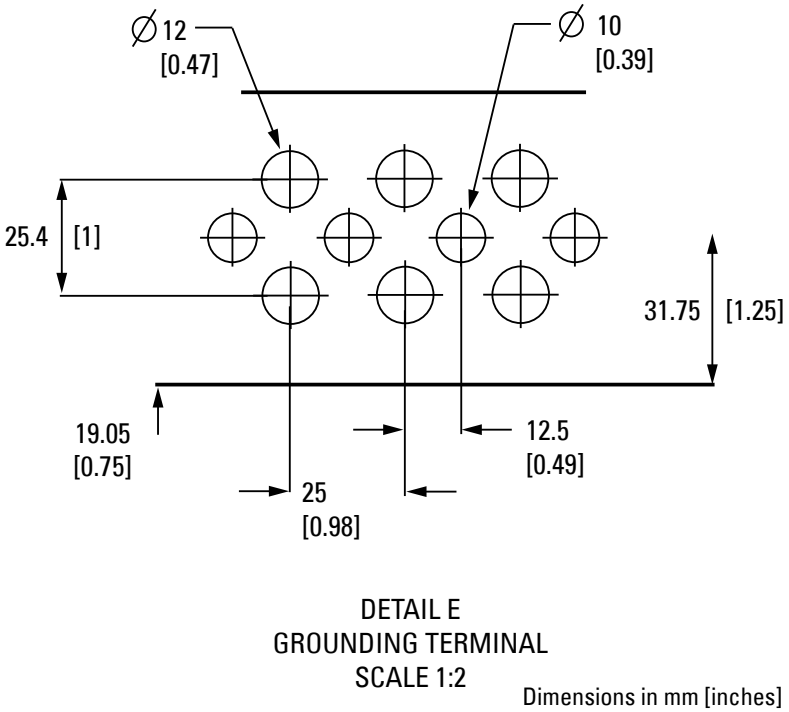

Figure 22. Battery Cabinet DC Connection Locations & Cable Connector

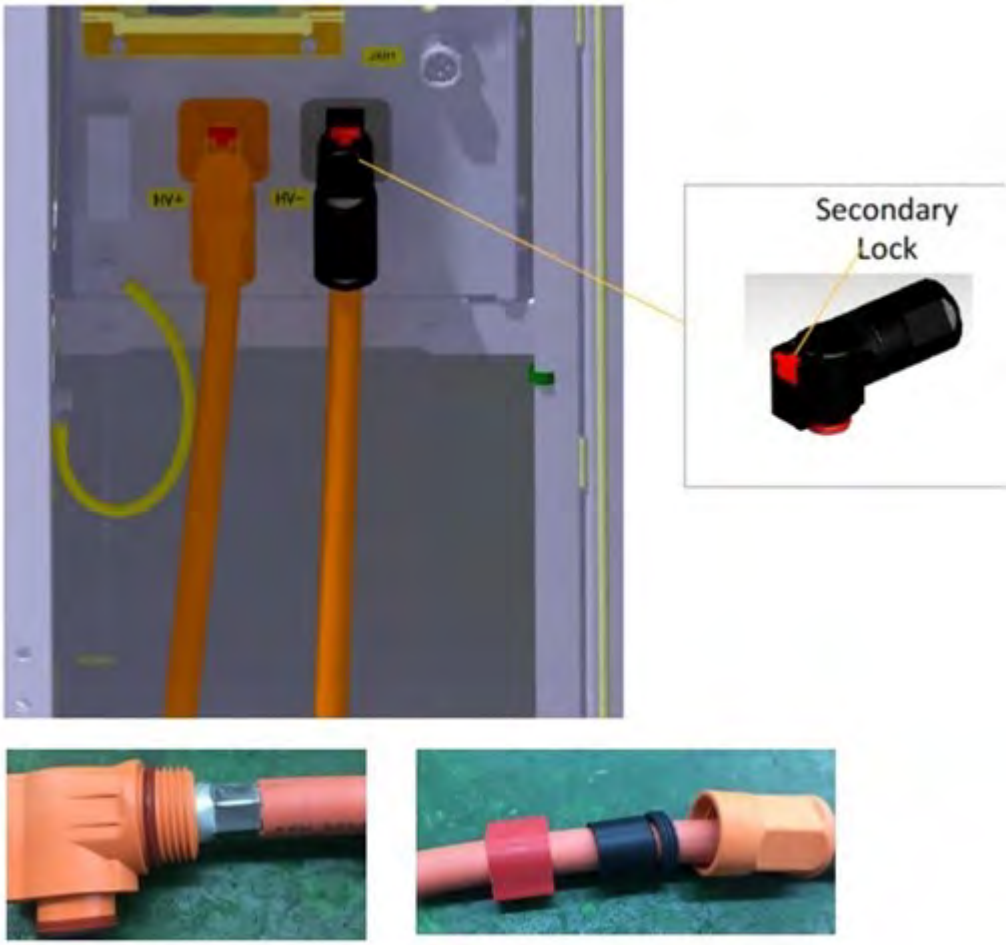

Figure 23. Battery Cabinet Ground

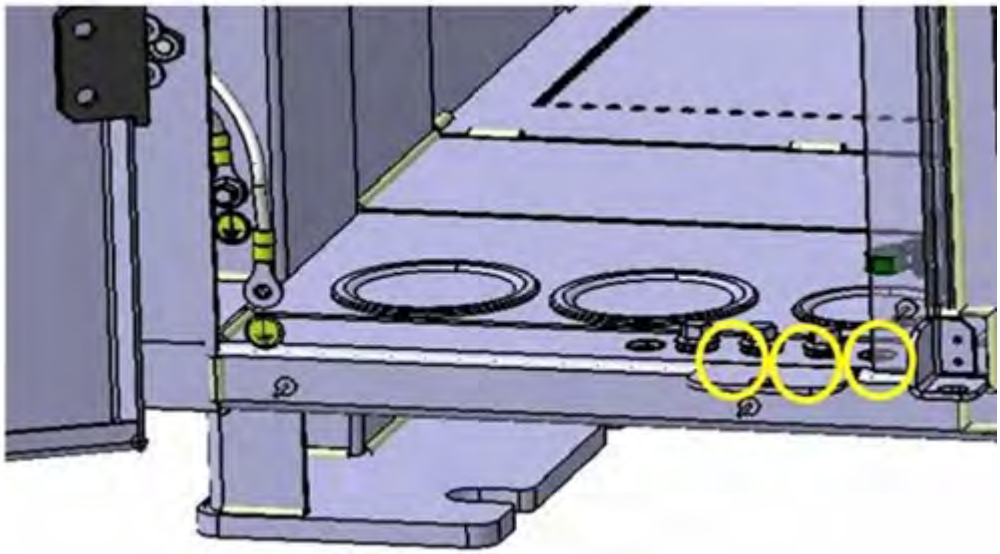

4.6 Installing Interface Connections

1. Terminate the ground wire to the 1/4" stud located at the lower front right side of the cabinet using customer supplied 1/4" ring lug. See Section 3.3.3 *Power Wiring Preparation* for wiring and termination requirements. See Figure 24 and Figure 26 for Control cabinet termination locations.
2. Terminate 480VAC phase A, B and C power wiring from input switchboard to the Control cabinet DB1, DB2, DB3 mechanical lug terminals.
3. Terminate the AUX power connections from the control cabinet terminal block TB1 to each battery cabinet JXH1 connector (manufacturer JONHON part number 360242-00760). JXH1 is a crimp type connector. See Section 3.3.4 *Interface Wiring Preparation* for wiring and termination requirements. See Figure 24 for TB1 location, Figure 27 for JXH1 location and Figure 28 for JXH1 connections.
4. Terminate the BMS and Fire Panel connections from the control cabinet terminal block TB3 to Battery Cabinet #1 JX1 connector (manufacturer Recodeal part number REVL16P100A-TABKK-1-A) provided with each battery cabinet. JX1 is a crimp type connector. See Section 3.3.4 *Interface Wiring Preparation* for wiring and termination requirements. See Figure 30 for TB3 location, Figure 27 for JXH1 location and Figure 28 for TB3 to JXH1 connections.
5. Terminate the BMS and Fire Panel connections from Battery Cabinet Battery Cabinet JX2 connector (manufacture Recodeal part number REVL16P100A-TB0K-1) to JX1 connector (manufacture Recodeal part number REVL16P100A-TB0K-1) provided with each battery cabinet. JX1 and JX2 are crimp type connectors. See Figure 27 for JX2 and JX3 locations and Figure 31 for JX3 to JX2 connections.

   Terminate the shield of the shielded twisted pair (STP) at the control cabinet end only (TB3-40). Crimp the JX1 and JX2 connector shield ends together in each cabinet for inter-cabinet connections.

   Add terminating resistors to JX2 plug of the last battery cabinet. Add 120 ohm resistor across JX2 connector positions 9 & 10, add qty (2) 6.8K ohm resistors across JX2 positions 5 & 6 and 7 & 8. **120 ohm resistor is not provided.** 6.8K ohm resistors are provided with the fire control panel in the control cabinet..
6. Terminate the Inverter cooling and control power connections from the control cabinet terminal block TB1 to the inverter XD17 terminal block located on the rear side of the inverter front door. See Figure 24 for

TB1 location, Figure 32 for inverter XD17 location and Figure 33 for inverter cooling and control power connections. See Figure 34 for lower inverter section aux power wiring routing.

7. Terminate the Modbus TCP shielded ethernet cable from the control cabinet network switch ES1 RJ45 port 5 to the inverter Modbus TCP RJ45 port. The control cabinet ES1 is located on the GSEC panel in the left lower rear of the control cabinet. Access through the control cabinet rear door (door with air conditioner). The Inverter Modbus TCP RJ45 port is located behind the front door of the inverter.

   Install qty (2) Ferrites on the inverter end of the CAT6 cable. Loop the CAT6 cable 3 times through the center of the ferrites (see Figure 35). Secure the ferrites to the CAT6 cable using cable ties. Use manufacture DMEGC part number H48X30X15 R10K ferrite or equivalent. See Table 12 for ferrite specifications.

   See Figure 32, Figure 34, and Figure 35 for Modbus TCP location and ethernet cable routing. See Figure 30 for ES1 location.

8. Terminate the Control Cabinet Site and BESS Meter connections from shorting blocks SBB and SBA to the Input Switchboard customer provided fused voltage measurement points and current transformers. The control cabinet SBA and SBB are located on the Power Meter panel in the left upper rear of the control cabinet. See input switchboard documentation for location of measurement interconnection terminal points.

   Customer provided Site and BESS voltage measurement points in the input switchboard should be fused with 1A, 600V, Class CC fused disconnects.

   Customer supplied current transformers (CT) must be installed in the input switchboard at the locations shown on the system one-line drawing P-11000943 indicated by CT1 & CT2 and sized to handle primary current as shown in table A of the one-line drawing. Select a CT with a secondary current rating of 5 A. A CT with 0.5% accuracy or better, with a rating over 2.5 VA is recommended to ensure the meter's accuracy. The wire length between the CTs and meter shall not exceed the burden rating of the CT to ensure accuracy.

NOTICE

Site Meter Current Transformers (CT1) must be installed and wired to be 'viewed as a load' - positive power implies importing from grid. Orient the CT with 'H1' side facing the Grid connection.

NOTE Customer provided sense wire lengths shall not exceed 200 feet.

   BESS Meter Current Transformers (CT2) must be installed and wired to be 'viewed as a source' - positive power implies discharging. Orient the CT with 'H1' side facing the Inverter connection.

   See Section 3.3.4 *Interface Wiring Preparation* for wiring and termination requirements. See Figure 36 for voltage and current meter wiring connections and shorting block location.

9. For systems that include the optional MX2 breaker control panel. The optional MX2 control panel can be purchased from Eaton and installed by the customer in the customer provided input switchboard. The panel dimensions are 412.4 mm tall by 404 mm wide (see Figure 37). There are two different panels available with the same physical dimensions. See the customer provided input switchboard documentation for mounting location of MX2 control panel.

   Part number P-103005214-001 panel is for MX2 breaker control with MX2 breaker auto close on initial power up. The second is part number P-103005214-002 for MX2 breaker control with MX2 breaker manual close on initial power up.

   See Figure 33 for remote sense terminal location and Figure 37 for MX2 control panel terminal locations. See Figure 38 for wiring connections. Note the connections at the MX2 breaker shown in Figure 36 are based on Eaton magnum breakers for reference. See input switchboard documentation for terminal identification of MX2 breakers other than Eaton Magnum type.

Table 12. Inverter MODBUS TCP CAT6 Cable Ferrite Specification

FERRITE SPECIFICATIONS		
Manufacturer	DMEGC	
Part Number	H48x30x15 R10K	
CORE DIMENSIONS (includes green coating)		
PROPERTY	VALUE	UNIT
Outside Diameter (max)	49.2	mm
Inside Diameter (min)	29	mm
Thickness (max)	16	mm
ELECTROMAGNETIC PROPERTY		
PROPERTY	VALUE	UNIT
Inductance Factor (AL)	14000 ± 30%	nH/N^2
Inductance (L)	1400 ± 25%	µH
R10K MATERIAL CHARACTERISTICS		
PROPERTY	VALUE	UNIT
Initial Permeability (µI)	10000 ± 25%	
Relative Loss Factor (tan g/µI) 10kHz	< 7.0 x 10	$x\ 10^{-6}$
Saturation Flux Density (Bs) 1149A/m	400	mT
Residual flux density (Br)	100	mT
Coercivity Force (Hc)	6.5	A/m
Rel. Temp. Coef. (µr) 20-60°C	-0.5 ~ 2.0	$x\ 10^{-6}$ / °C
Hysteresis material constant (nB) 25°C, 10kz, 1.5~3mT	< 1.4	$x10^{-6}$ / mT
Curie Temp (Tc)	> 120	°C
Resistivity (ρ)	0.15	Ω.m
Density (d)	4.9	G/cm^3

Figure 24. Control Cabinet AC Power, AUX power and Meter Terminals for EnerOne+ (Up to 3 battery racks)

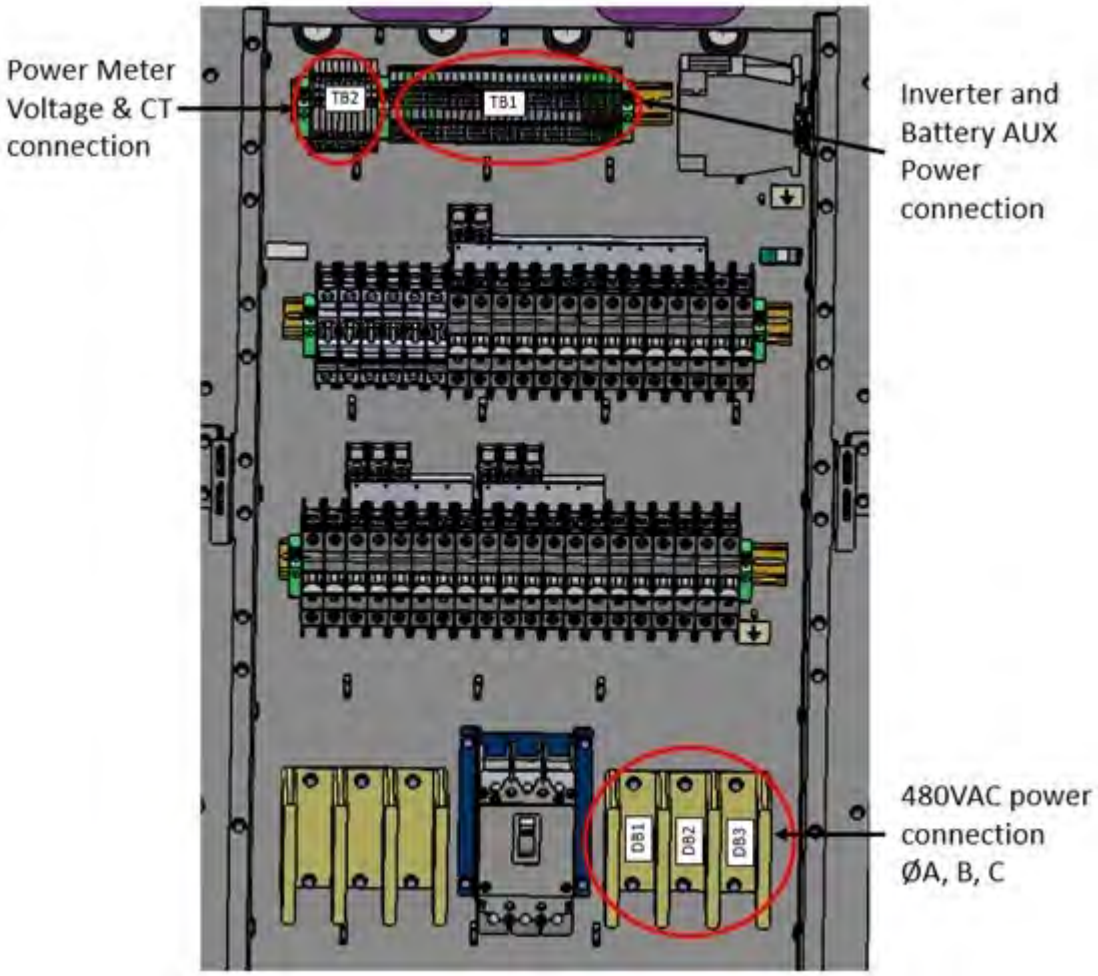

Figure 25. Control Cabinet AC Power, AUX power and Meter Terminals for EnerOne+ (4 - 8 battery racks)

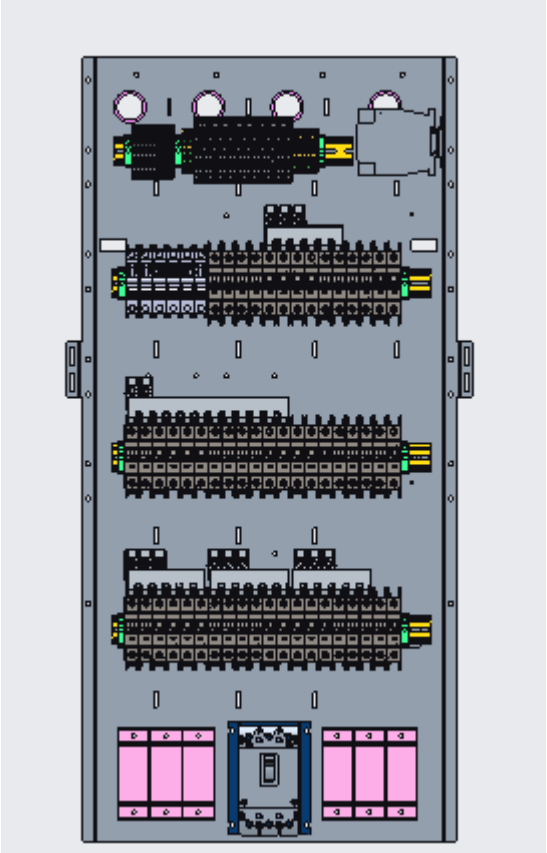

Figure 26. Control Cabinet ground location

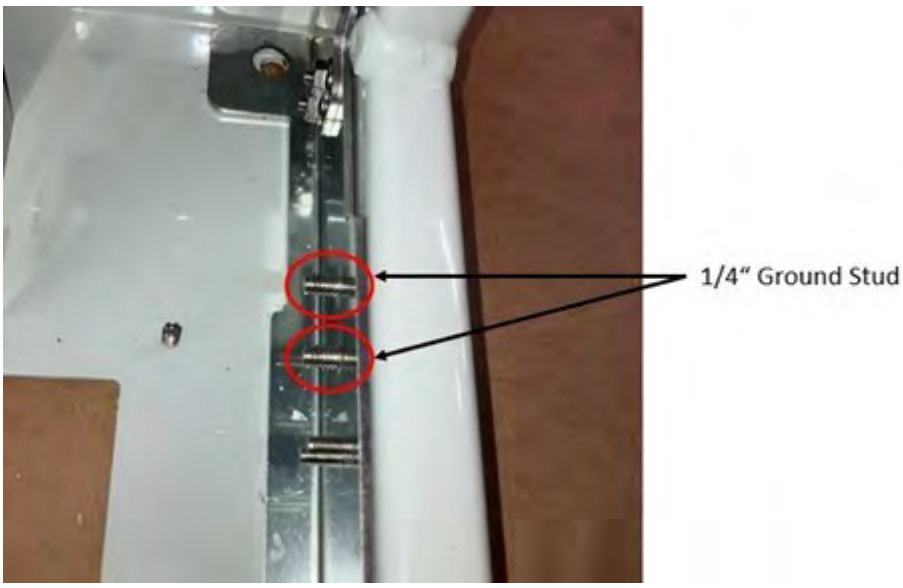

Figure 27. Battery Cabinet AUX Power and BMS connector locations

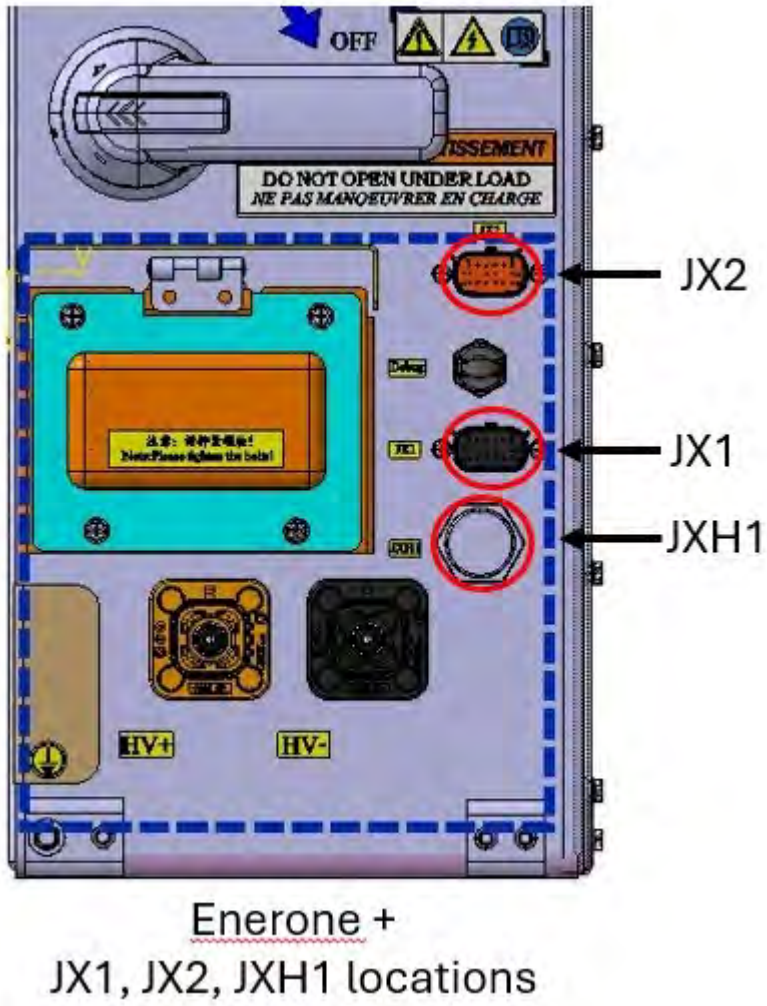

Figure 28. Battery Cabinet JXH1 connection for EnerOne+ (up to 3 battery racks)

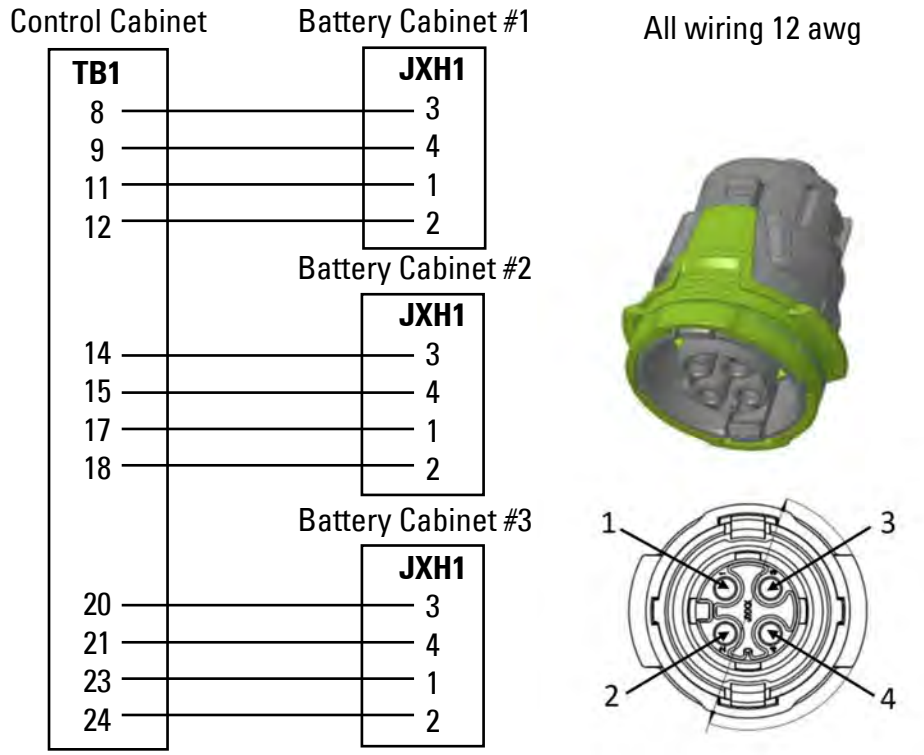

Figure 29. Battery Cabinet JXH1 connection for EnerOne+ (4-8 battery racks)

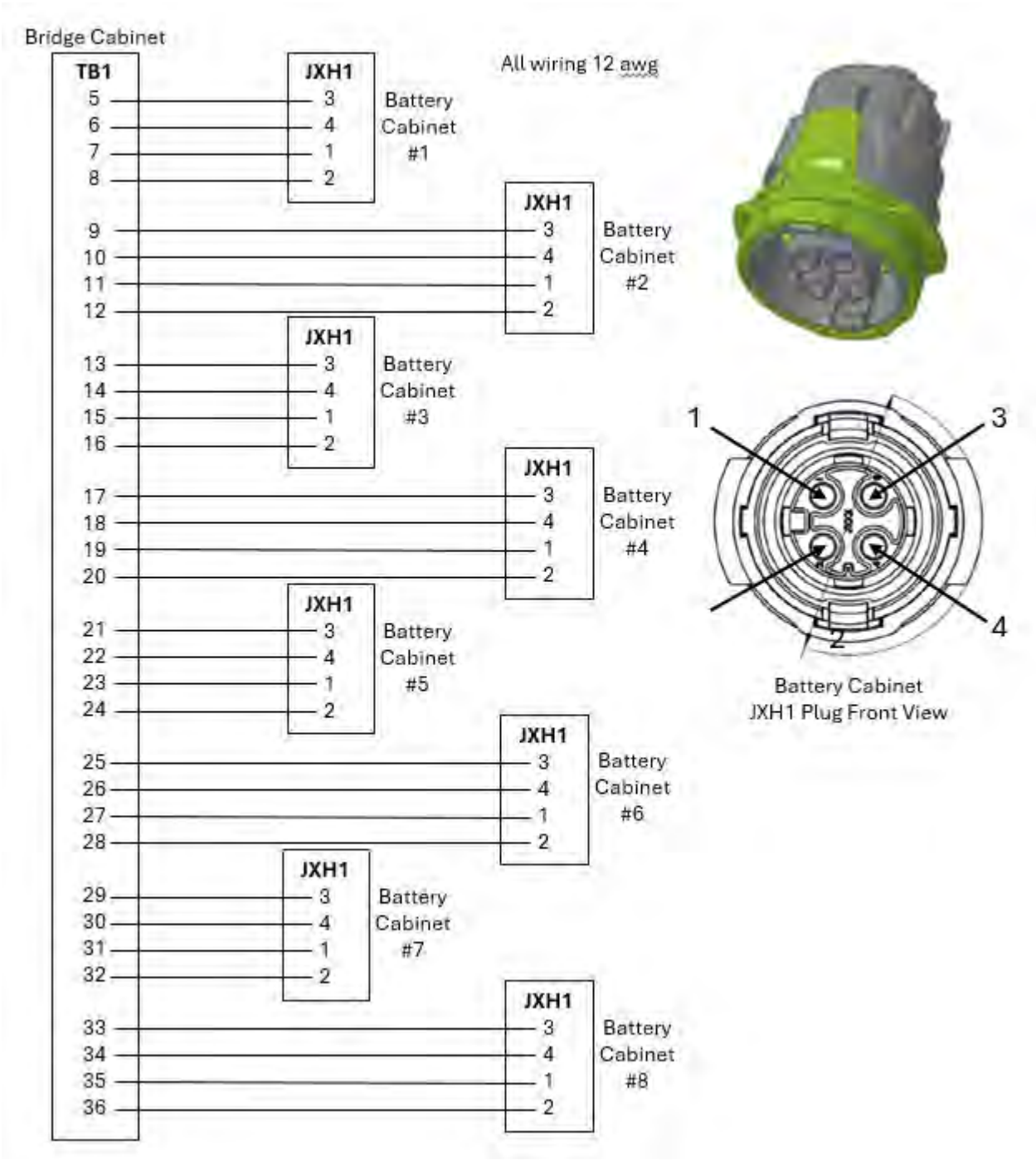

Figure 30. Control Cabinet TB3 & ES1 Location and detail

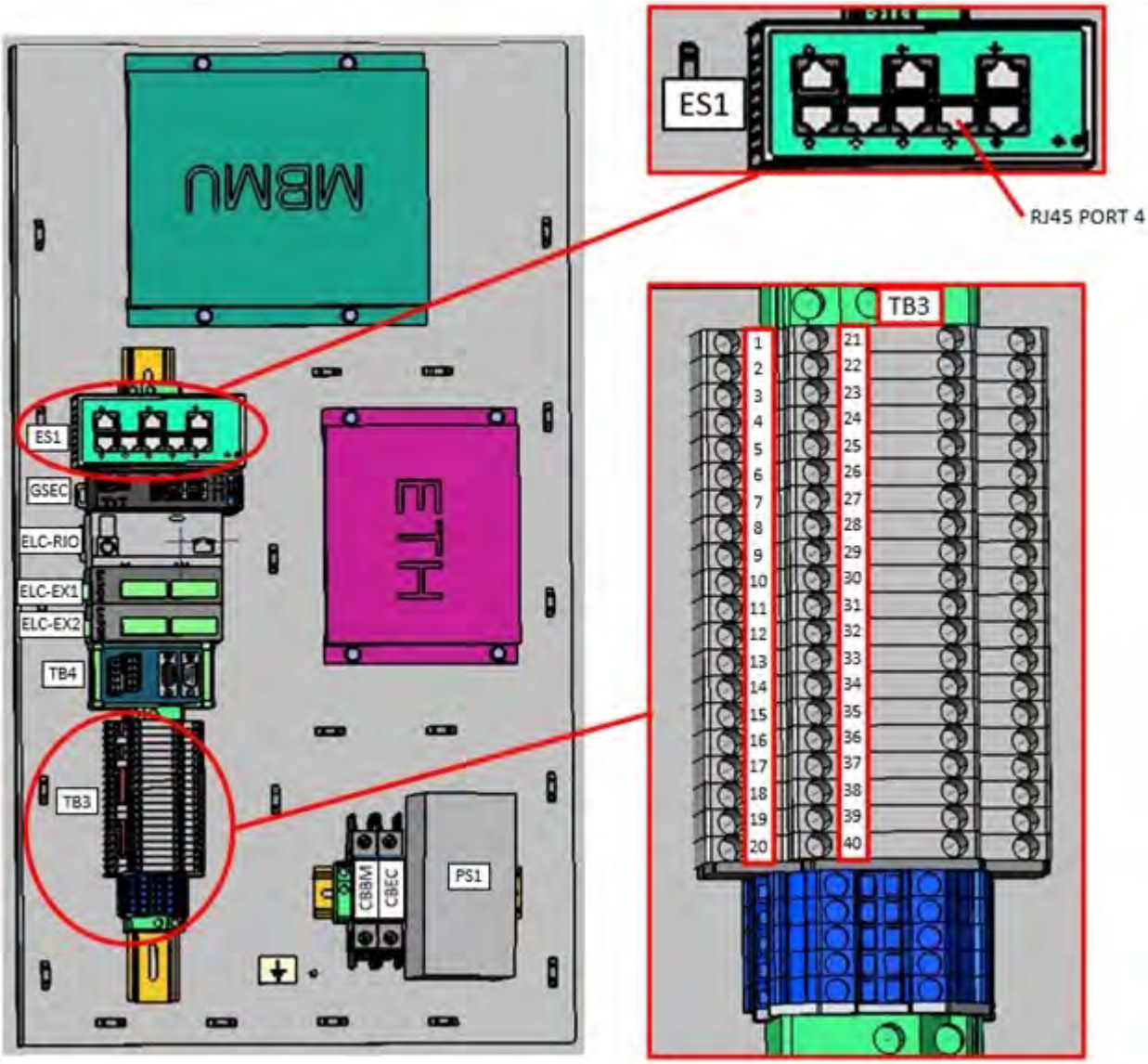

Figure 31. Battery Cabinet JX2 & JX3 connections for EnerOne+

Figure 32. Inverter Inside Front Door XD17, XD3, X22 & M10 Terminal locations and Modbus TCP, Communication and AUX power wire routing

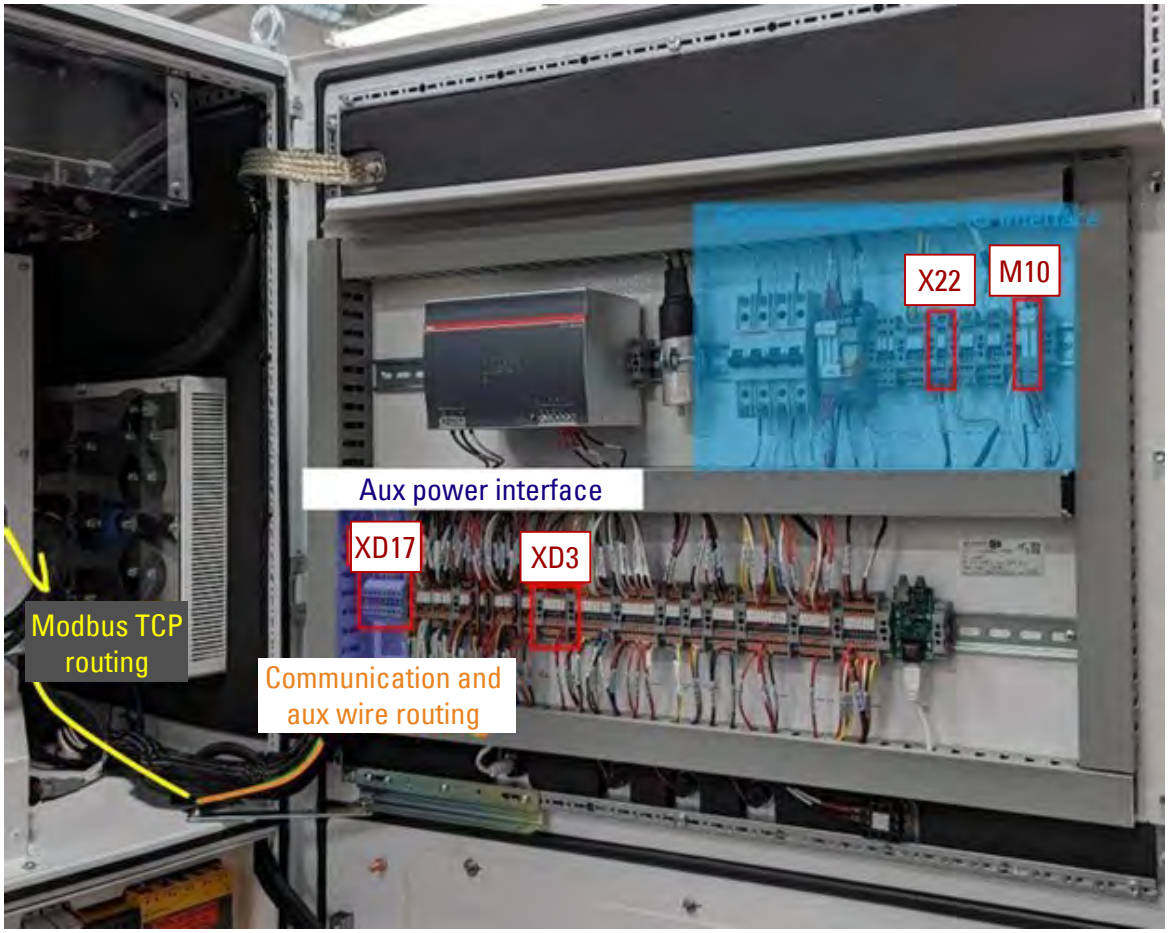

Figure 33. Inverter Cooling and Control Power connections

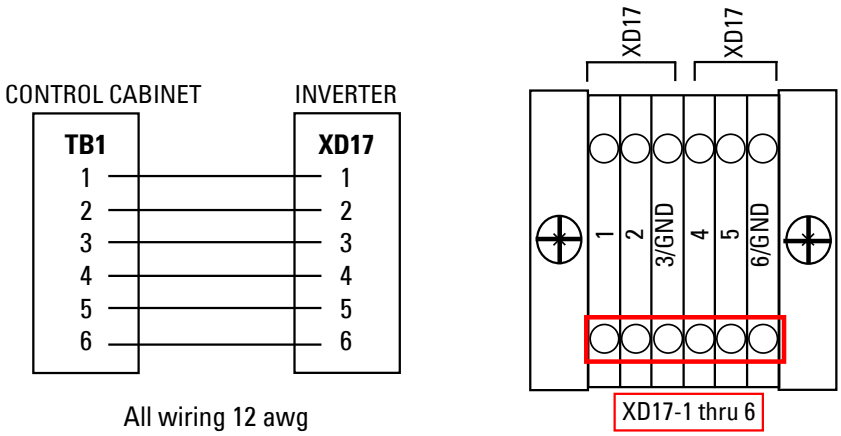

Figure 34. Lower Inverter Section Communication and AUX power wire routing

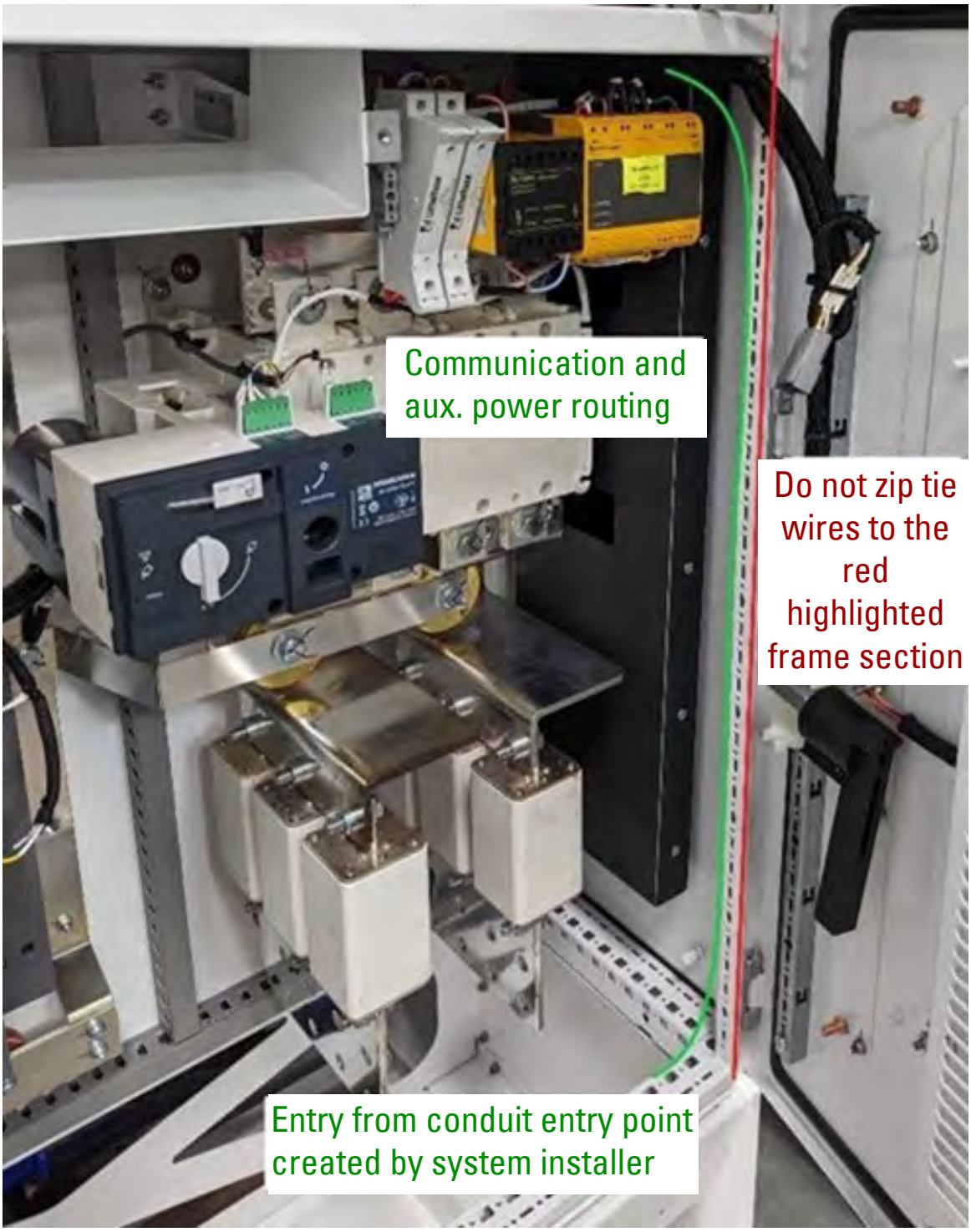

Figure 35. Inverter Remote Sense and Modbus TCP location and connections

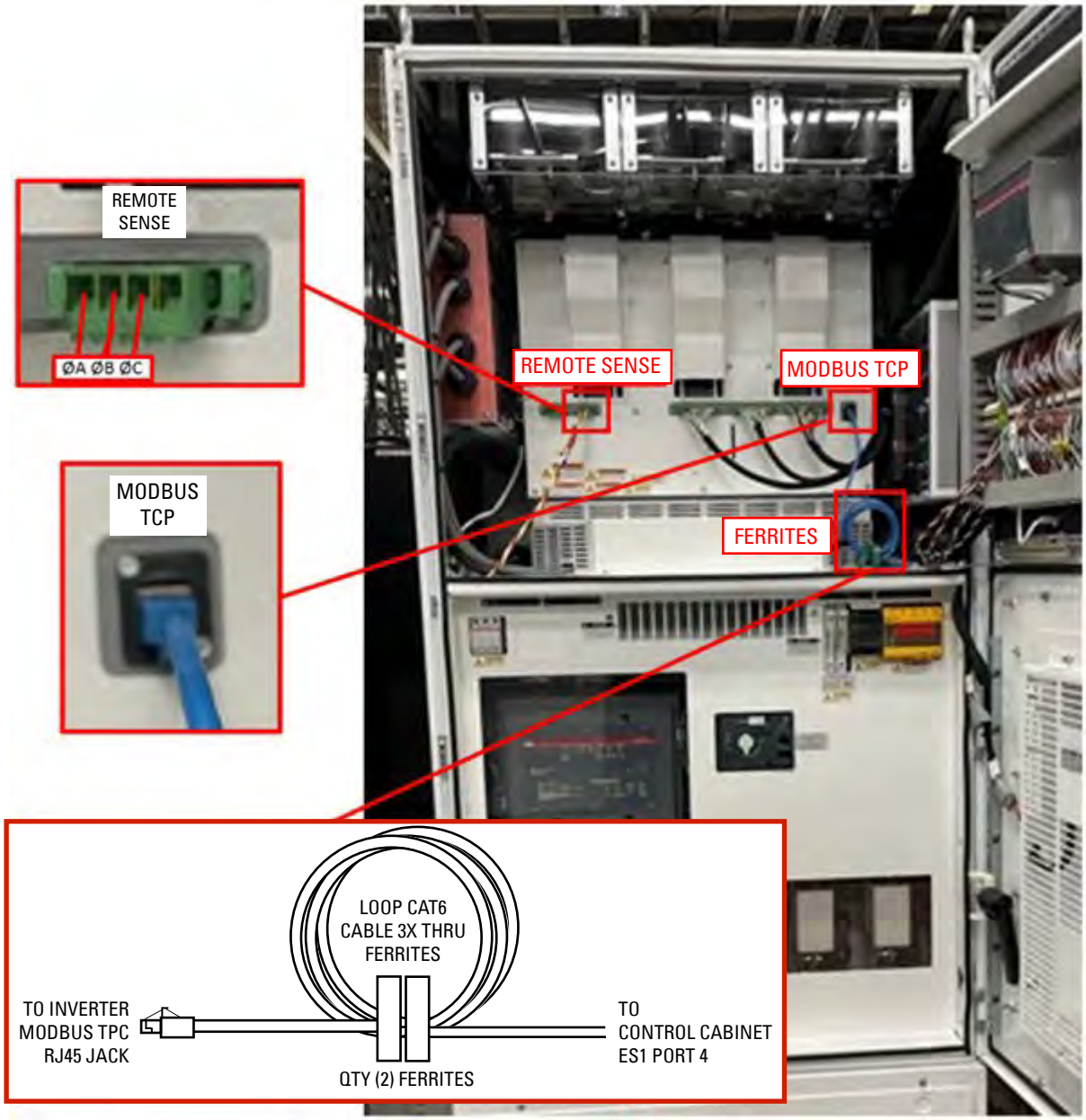

Figure 36. Power Meter SBA and SBB location and connections

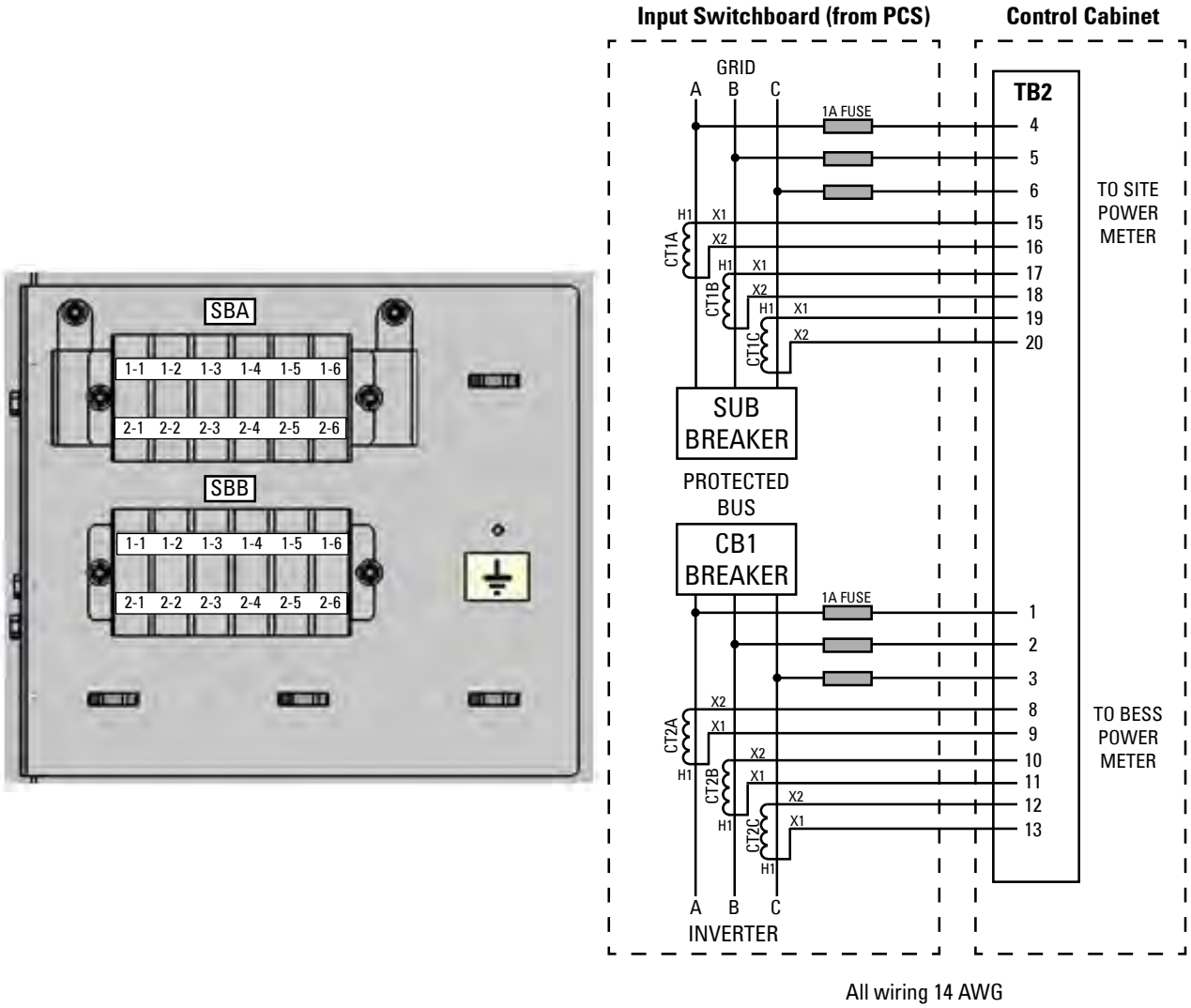

Figure 37. MX2 Control panel dimensions and terminal locations

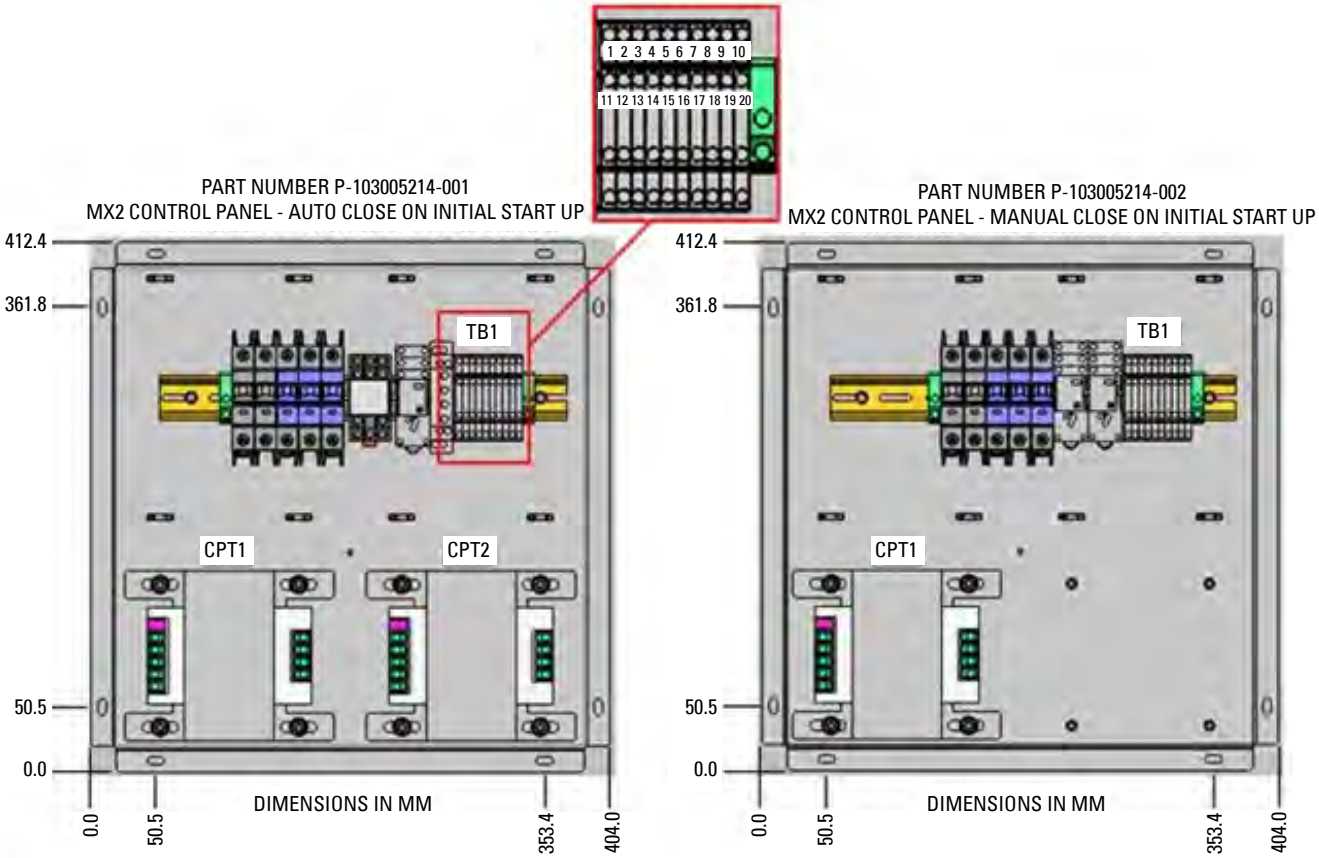

Figure 38. MX2 Control panel connections

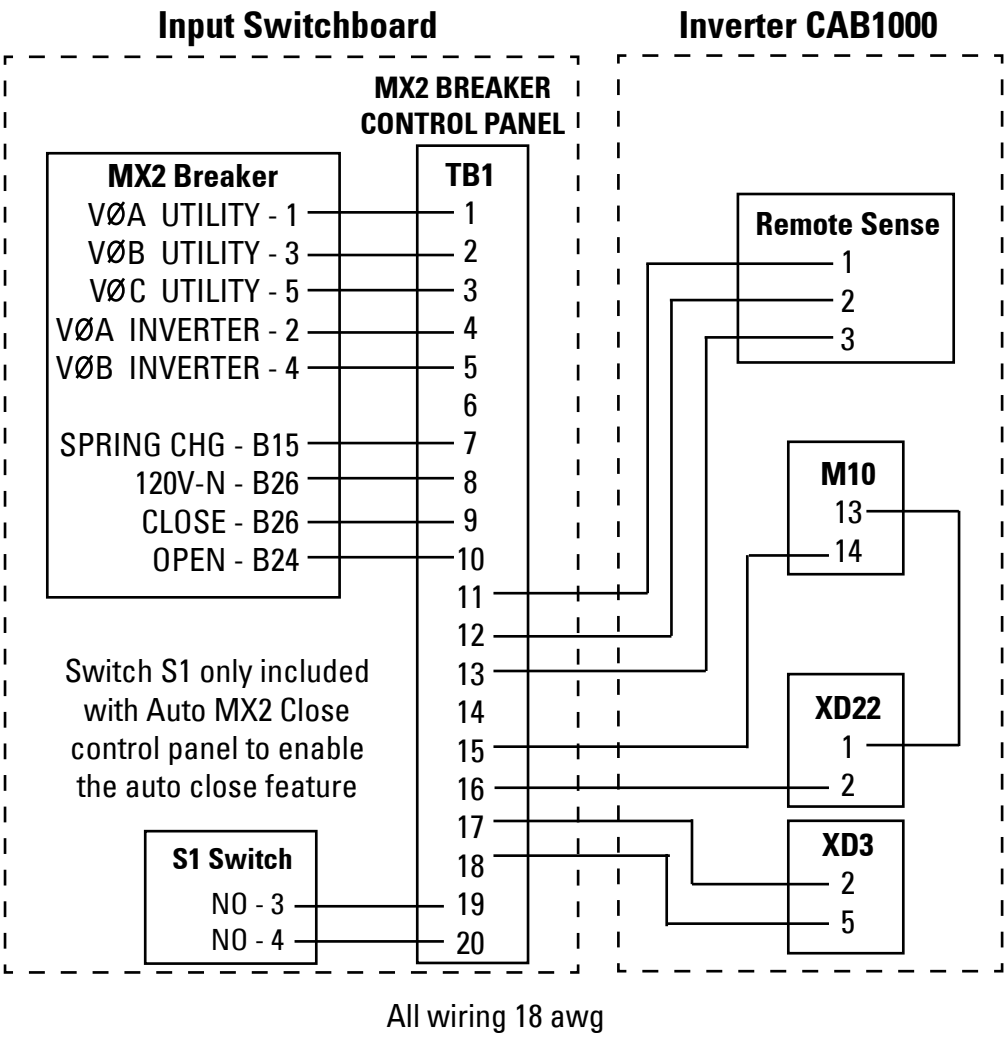

4.7 Initial Startup

NOTICE

Startup and operational checks must be performed by an authorized Eaton Customer Service Engineer, or the warranty terms specified on the product's resources page become void. See Chapter 11 *Warranty* for details. This service is offered as part of the sales contract for the Eaton xStorage 250-1000. Contact an Eaton service representative in advance (a minimum four-week notice is required) to reserve a preferred startup date.

4.8 Completing the Installation Checklist

The final step in installing the Eaton xStorage 250-1000 is completing the following Installation Checklist. This checklist ensures that you have completely installed all hardware, cables, and equipment. Complete all items listed on the checklist to ensure a smooth installation. Make a copy of the Installation Checklist before filling it out and retain the original. After the installation is complete, an Eaton Customer Service Engineer must verify the operation of the xStorage 250-1000 system and commission it. Service personnel may request a copy of the completed Installation Checklist to verify all applicable equipment installations have been completed.

Installation Checklist:

- ❏ All packing materials and restraints have been removed from the cabinet.
- ❏ The xStorage 250-1000 is installed on an appropriately rated and level concrete pad.
- ❏ The xStorage 250-1000 is placed in its installed location.
- ❏ All conduits and cables are properly routed.
- ❏ All power cables are properly sized and terminated.
- ❏ All ground conductors are properly installed.
- ❏ The control cabinet fire alarm is visible from multiple locations around the system.
- ❏ The control cabinet antenna is not obstructed by other site components.
- ❏ All internal safety shields are installed.
- ❏ The area around the xStorage 250-1000 system is clean and free of packing material and debris.
- ❏ Adequate workspace and clearances exist around the xStorage 250-1000.
- ❏ Startup and operational checks are performed by an authorized Eaton Customer Service Engineer.
- ❏ Visit www.eaton.com/pq/register to register your new Eaton xStorage 250-1000.

Notes:

Chapter 5 Understanding BESS Operation

5.1 BESS Overview

The xStorage 250-1000 is developed with capability for grid-interactive functions and ancillary services such as peak shaving, time of use optimization, load shifting, demand response, photovoltaic (PV) self-consumption, and backup power. It may be used as a standalone energy management solution or incorporated into a larger energy management system, such as a microgrid.

Bidirectional BESS power flow is controlled by Eaton's Global Stored Energy Controls (GSEC) – an internal controller that manages BESS operation autonomously according to user setpoints or by following setpoints from a higher-level system controller. The xStorage 250-1000 is capable of both grid-following and grid-forming operations. See Chapter 6 *Configuration, Control, and User Interfaces* for additional information on user configuration and control of GSEC and BESS operation.

The most basic xStorage 250-1000 system consists of a Power Conversion System (PCS), battery cabinet(s), control cabinet and an auxiliary transformer. Within the control cabinet are auxiliary components, including the GSEC controller, 24V power supply, network switch, battery cabinet communication modules, discrete input/output module, BESS and SITE power meters and associated voltage and current sense connections, uninterruptible power supply (UPS) for critical control power, surge protection device, HVAC unit, heaters, fire control panel, fire alarm, antenna for cellular communications, and control and cooling power distribution. A simplified block diagram of the xStorage 250-1000 BESS product is shown in the figure below.

Figure 39. xStorage 250-1000 Simplified Block Diagram

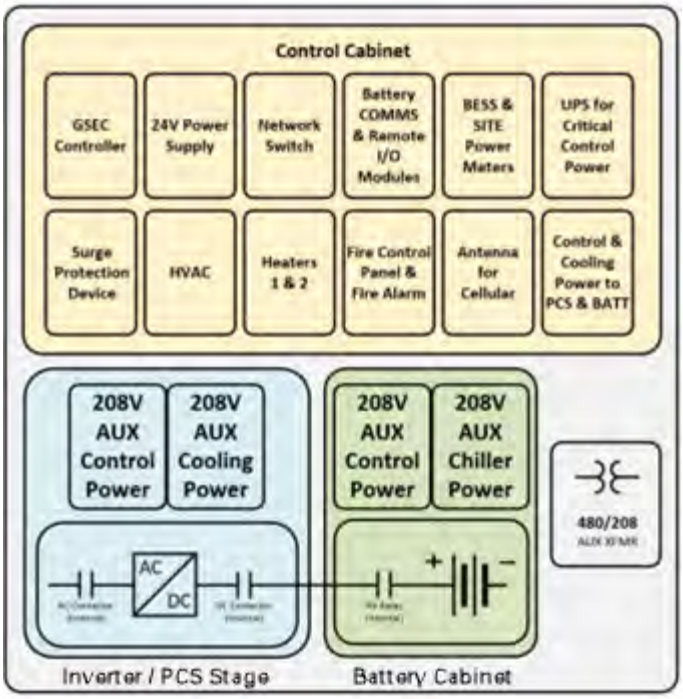

5.2 System Application

The xStorage 250-1000 is intended to be installed as a single-input single-output energy storage component in a localized power system, typically consisting of a utility/grid source and one or multiple loads.

The following figure highlights the critical system level components involved in the integration of the BESS into the power system.

In the simplest installation, there are four main circuit breakers to consider:

- CB1
- CB2
- SUB
- LOAD

CB1 is the AC circuit breaker dedicated to the main power stage of the BESS. CB1 is rated to handle system level voltage and current based on the power level of the installed BESS (250kW – 1000kW). CB1 is installed on the feeder to customer-provided isolation transformer, PCS, and battery modules. The xStorage 250-1000 also requires a CB2 breaker which is dedicated to the auxiliary power required by the BESS. CB2 feeds the control cabinet which powers auxiliary components, the auxiliary transformer, and the control and cooling/chiller power to the PCS and battery modules.

The Site Utility Breaker, denoted SUB in the figure, is provided by others in the customer switchgear. The SUB feeds and protects the entire localized power system including the BESS and any loads. Any feeder branches that are connected to loads in the system are aggregated into a single load in the following figure for simplicity and associated with one load breaker, denoted LOAD.

Figure 40. xStorage 250-1000 Integrated into a Power System

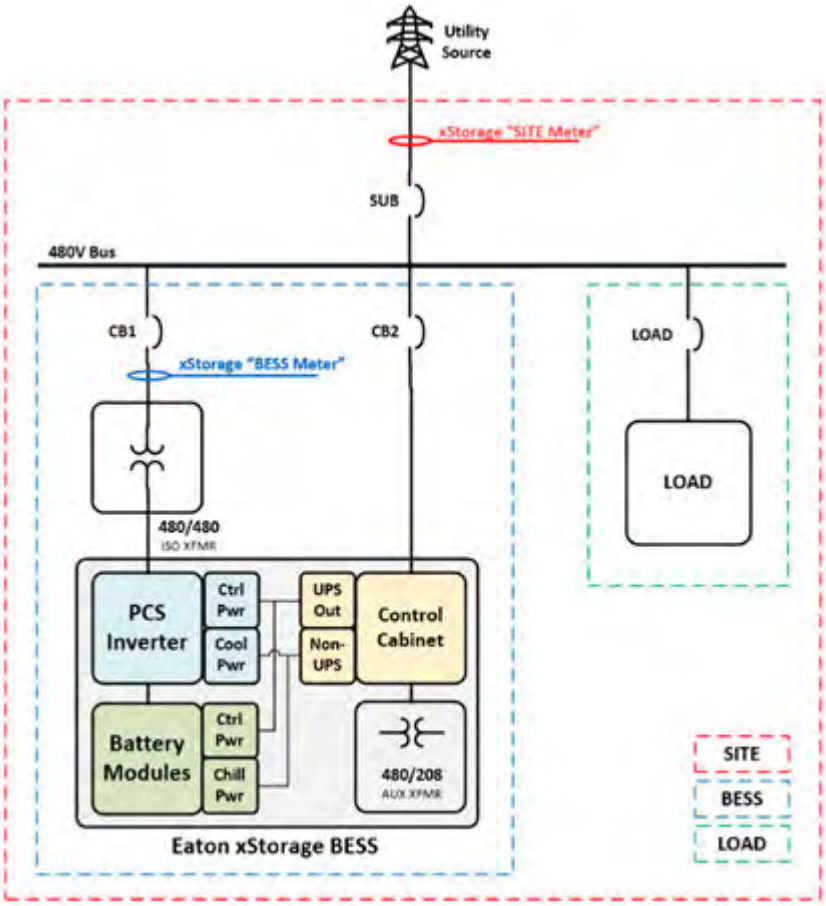

The two power meters identified in the figure above, labeled "BESS Meter" and "SITE Meter" are physical meter components installed within the control cabinet. The figure identifies where current sense (through use of CTs) and voltage sense (through fused connection to the three-phase voltage measurement point) are located. The meters are used by the GSEC controller to provide power measurements to the customer and are also used as feedback measurements to the control algorithms that handle energy services. The BESS Meter takes power measurements of the xStorage 250-1000 as an isolated system, measuring between CB1 and the isolation transformer and is installed in the proper orientation such that the BESS is **viewed as a source**. The SITE Meter measures all power flowing into and out of the site, located between the SUB and the upstream grid connection and is installed in the proper orientation such that the entire SITE is **viewed as a load**. The aggregated load does not have a dedicated meter. However, the GSEC controller calculates the aggregated load power flow which is available to the user.

While the control cabinet is fed directly from 480V system voltage, some components in the control cabinet require 480V power supply, while others require 208V power supply. The 480/208V auxiliary transformer is used to provide 208V to the components that require it within the control cabinet.

To protect critical communications and controls and enable features during utility outages, a control power UPS exists within the control cabinet. Some components within the control cabinet are UPS protected, while others are not. As shown in the Figure 40, above, the control power to the inverter and battery modules are UPS protected, while the cooling and chiller power is not .Figure 41, below, highlights the physical location of some of the Control Cabinet critical components.

Figure 41. Control Cabinet Subassemblies, Isometric and Partial Front View

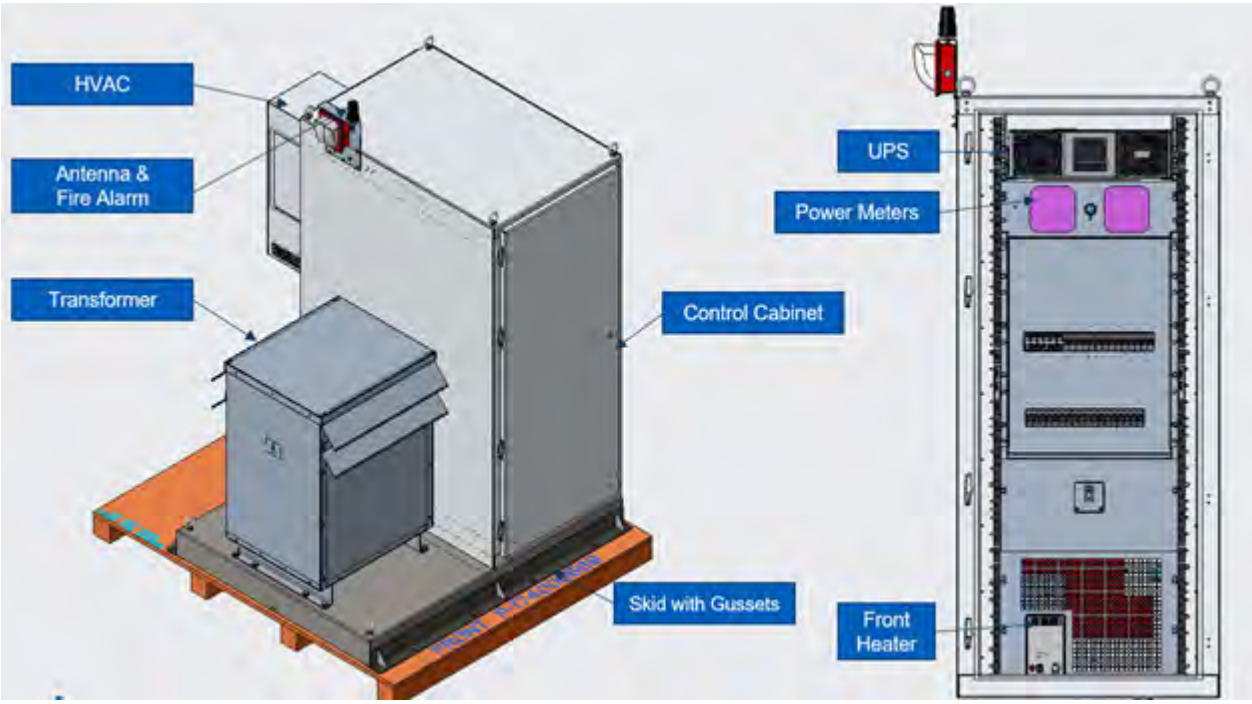

5.3 State Definitions and Commands

To monitor and control the state of the xStorage 250-1000, the GSEC controller implements three generic state machines that map out the operational and transient states of the Battery, PCS, and BESS. The Battery and PCS state machines combine to create the overall BESS state machine. Through user interfaces, state commands are used to move between states and clear faults and warnings.

Table 13 through Table 17 define the states and state commands which define overall system operation.

Table 13. xStorage 250-1000 Battery States

Battery State Definitions	
State	**Definition**
Unknown	The battery state is unknown.
Fault	The battery is indicating a fault condition. The BESS shall be commanded to fully shutdown.
Disconnected	The high voltage DC connection is currently open at the battery cabinet. The PCS shall not be running if this is the present state.
Connected	The high voltage DC connection is currently closed and available for connection to the DC bus within the PCS stage. The PCS may be stopped or running in this state, and power may or may not be flowing while in this state.
Clearing Fault	A transient state in which a clearing fault action has been initiated for the battery.

Table 13. xStorage 250-1000 Battery States (Continued)

Battery State Definitions	
State	**Definition**
Disconnecting	In this transient state, the BESS is performing the necessary work to enter Disconnected from the Connected state. This involves an orderly and safe disconnection of batteries from DC buses.
Connecting	In this transient state, the BESS is performing the necessary work to transition from Disconnected to Connected state. This involves an orderly startup and safe connection of batteries, making the high voltage DC connection available to the PCS stage.

Table 14. xStorage 250-1000 PCS States

Power Conversion System (PCS) State Definitions	
State	**Definition**
Unknown	The PCS state is unknown.
Fault	The PCS is indicating a fault condition. The BESS shall be commanded to fully shutdown.
Stopped	The PCS is not currently running. The battery system may or may not be connected in this state.
Running Following	The PCS has been started successfully, the BESS is presently able to exchange energy with its AC connection, and the BESS will respond to real and reactive power commands from the controller.
Running Forming	The PCS is operating in grid forming mode and maintaining the voltage and frequency of the local area grid. The PCS may enter grid forming mode automatically as response to a loss of utility or if the user manually forces an island condition.
Clearing Fault	A transient state in which a clearing fault action has been initiated for the PCS.
Stopping	In this transient state, the BESS is performing the necessary work to transition from either Running state to Stopped. This involves deactivating PCS units and opening both AC side and DC side contactors.
Starting in Following	In this transient state, the BESS is performing the necessary work to transition from Stopped to Running Following. This involves an orderly startup and safe connection of the PCS stage and closing of both DC and AC side contactors. The PCS will synchronize to the local grid before closing the AC contactor.
Starting in Forming	In this transient state, the BESS is performing the necessary work to transition from Stopped to Running Forming. This involves an orderly startup and safe connection of the PCS stage and closing of both DC and AC side contactors. The PCS will utilize the voltage and frequency references to establish the local AC grid.
Transitioning to Following	In this transient state, the BESS is performing the necessary work to transition from Running Forming to Running Following. This transient state can be called upon by a state command or automatically on detection of a return to healthy utility conditions depending on system configuration options.
Transitioning to Forming	In this transient state, the BESS is performing the necessary work to transition from Running Following to Running Forming. This transient state can be called upon by a state command or automatically on detection of a utility outage based on depending on configuration options.

Table 14. xStorage 250-1000 PCS States (Continued)

Power Conversion System (PCS) State Definitions	
State	**Definition**
RideThru	The PCS is experiencing grid abnormality (such as voltage or frequency excursion) but remains connected and operational without tripping. In this state, the BESS continues to respond to real and reactive power commands from the controller.
Cessation	After grid conditions exceed voltage or frequency ride through limits, the PCS goes into this state, momentarily stopping active power transfer by clamping output power to zero while staying electrically connected. In this state, the PCS does not trip or shut down, and does not accept power commands from the controller.

Table 15. xStorage 250-1000 BESS States

Battery Energy Storage System (BESS) State Definitions	
State	**Definition**
Unknown	The BESS state is unknown.
Fault	The BESS is indicating a fault condition. The BESS shall be commanded to fully shutdown. This can be the result of a PCS fault, Battery fault, General System fault, or any combination of the three.
Offline	All battery cabinets are disconnected, and the PCS is stopped.
DC Connected	The battery is in the Connected state, and the PCS is stopped.
Grid Following	The battery is in the connected state, and the PCS is running in Grid Following.
Grid Forming	The battery is in the connected state, and the PCS is running in Grid Forming.
Clearing PCS Fault	A transient state in which a clearing fault action has been initiated for the PCS.
Clearing Battery Fault	A transient state in which a clearing fault action has been initiated for the Battery.
Clearing System Fault	A transient state in which a clearing fault action has been initiated for General System faults.
Disconnecting Battery	The battery is in the disconnecting transient state. The PCS will stop prior to entering this transient state if presently running.
Connecting Battery	The battery is in the connecting transient state. The PCS shall not be started prior to the completion of this transient state.
Stopping PCS	The PCS is in the stopping transient state.
Starting in Following	The PCS is in the starting in following transient state. The battery shall be connected prior to entering this transient state.
Starting in Forming	The PCS is in the starting in forming transient state. The battery shall be connected prior to entering this transient state.
Transitioning to Following	The PCS is transitioning from forming to following.
Transitioning to Forming	The PCS is transitioning from following to forming.

Table 15. xStorage 250-1000 BESS States (Continued)

Battery Energy Storage System (BESS) State Definitions	
State	**Definition**
RideThru	The PCS is experiencing grid abnormality (such as voltage or frequency excursion) but remains connected and operational without tripping. In this state, the BESS continues to respond to real and reactive power commands from the controller.
Cessation	After grid conditions exceed voltage or frequency ride through limits, the BESS goes into this state, momentarily stopping active power transfer by clamping output power to zero while staying electrically connected. In this state, the BESS does not trip or shut down, and does not accept power commands from the controller.

Table 16. xStorage 250-1000 State Commands

State Commands	
Command	**Definition**
No State Command	No state command is present. The current state will hold.
Goto Offline	A command to move to the Offline state. This may involve disconnecting the battery, stopping the PCS, or both depending on the present state.
Goto DC Connected	A command to move to the DC Connected state. This involves connecting the battery if in the Offline state or stopping the PCS if in a running state.
Goto Following	A command to move to the Following state. This may involve connecting the battery, starting the PCS in following, and/or transitioning from the forming state as necessary.
Goto Forming	A command to move to the Forming state. This may involve connecting the battery, starting the PCS in forming, and/or transitioning from the forming state as necessary.

Table 17. xStorage 250-1000 Fault Handling Commands

Fault and Warning Clear Commands	
Command	**Definition**
No Clear Command	No clear command is present.
Clear PCS Warnings	Clear only PCS warnings.
Clear PCS Faults	Clear only PCS faults.
Clear Battery Warnings	Clear only Battery warnings.
Clear Battery Faults	Clear only Battery Faults
Clear General System Warnings	Clear only General BESS System warnings.
Clear General System Faults	Clear only General BESS System faults.
Clear All BESS Warnings	Clear PCS, Battery, and General BESS System warnings.
Clear All BESS Faults	Clear PCS, Battery, and General BESS System faults.
Clear All BESS Faults and Warnings	Clear all BESS faults and warnings.

Figure 42 through Figure 44 outline the xStorage 250-1000 component state machine diagrams.

NOTICE

The BESS state machine is a summation of the Battery and PCS state machines.

Figure 42. Battery State Machine Diagram

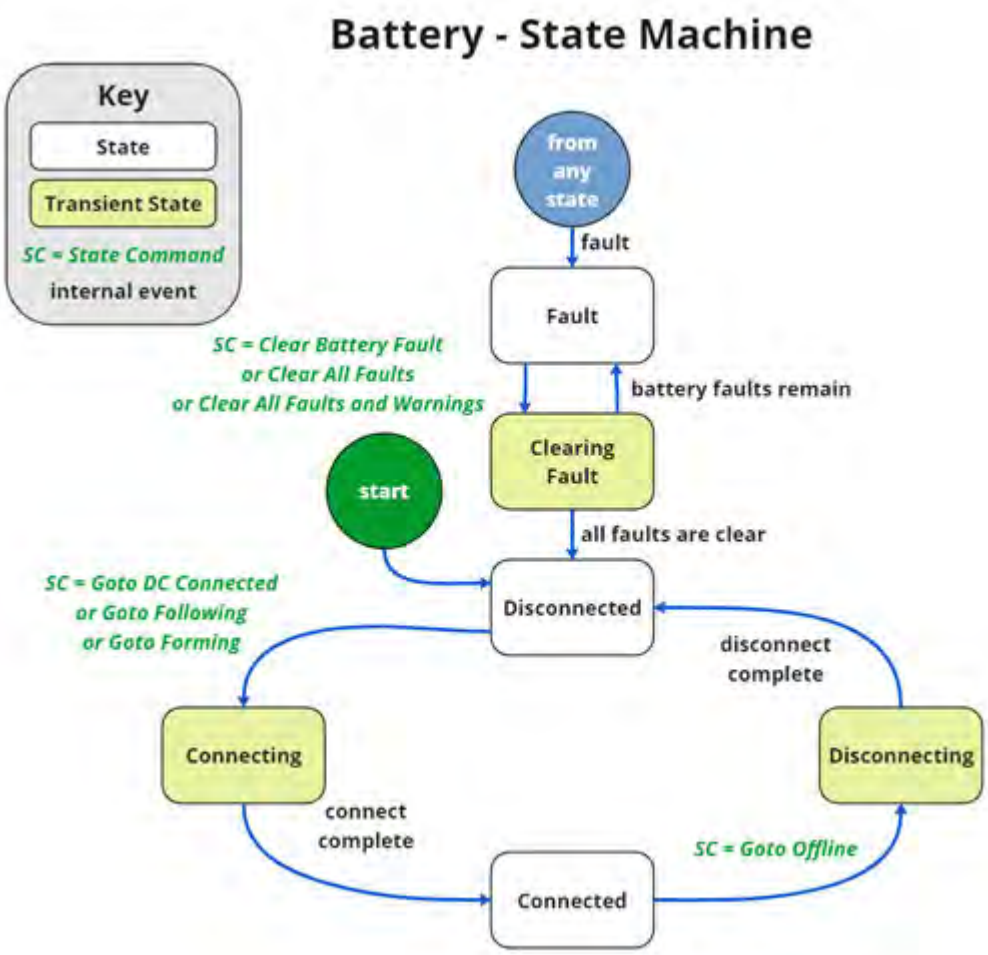

Figure 43. PCS State Machine Diagram

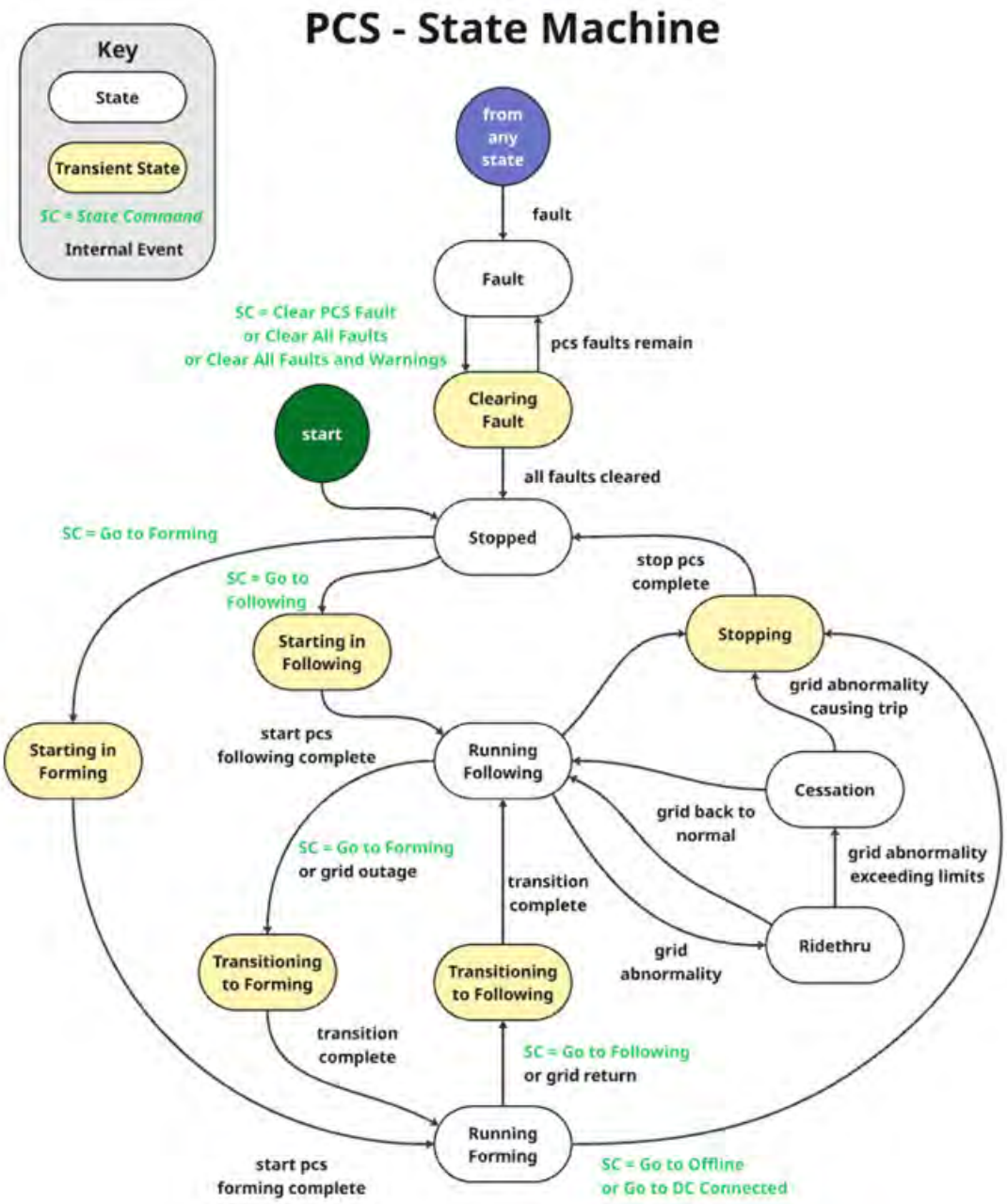

Figure 44. BESS State Machine Diagram

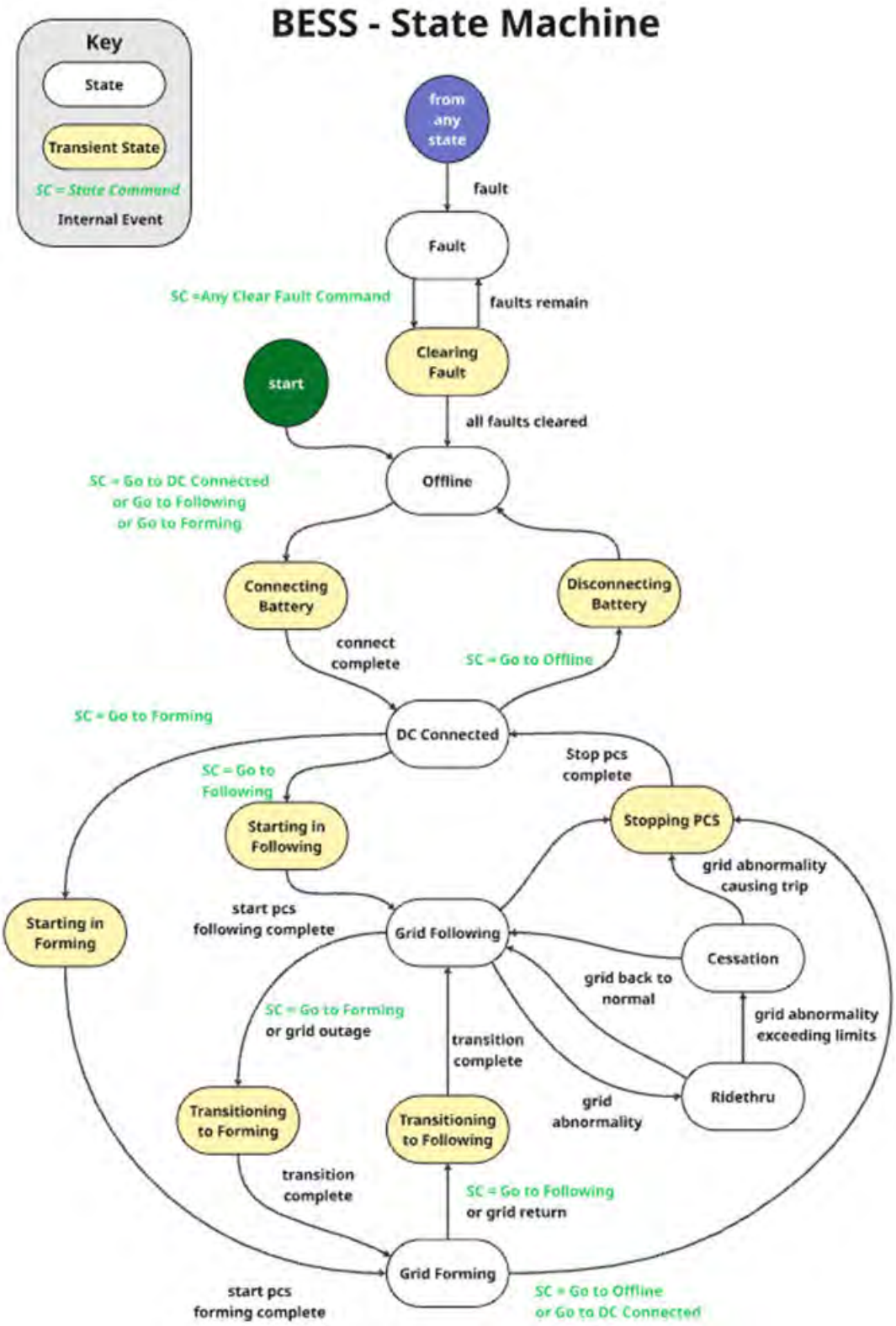

5.4 Grid Following BESS Operation

When the BESS is operating in the Grid Following state, the BESS is grid-connected and able to exchange power via its AC connection to the grid. In this state, there are several user configurable functions that allow the user to determine how the BESS will charge and discharge to achieve specific objectives.

The functions are organized into the following structure:

- Energy Services
- Operation Modes
- User Modes

And are limited by:

- Limiter Functions

5.4.1 Energy Services

Energy Services are the fundamental control algorithms of xStorage 250-1000 which enable grid-interactive features, ancillary services, and energy management of the system. Energy Services are created to allow the user to both configure the system through use of practical user inputs at a higher level of abstraction, such as a peak shaving target demand or target battery state of charge, as well as general power setpoints. For functions that offer a higher level of abstraction for user input, the internal controls automatically determine the proper power references required to fulfill the desired function through the algorithm.

The GSEC controller offers seven Energy Services to the user which can be leveraged when the xStorage 250-1000 is operating in a grid following state and capable of exchanging power with the power system. Each of the Energy Services may have associated configuration parameters which are static setpoints set by the user to define the operation of the function.

Fundamentally, Energy Services can be described as “WHAT” the BESS is performing during operation.

A. Idle Service

Idle Service is the default Energy Service. When selected by the user, the controller will pass a 0kW, 0kVar command directly to the PCS stage. No reference command limitations nor feedback from the system is required to generate the command to the PCS.

Figure 45. Idle Service

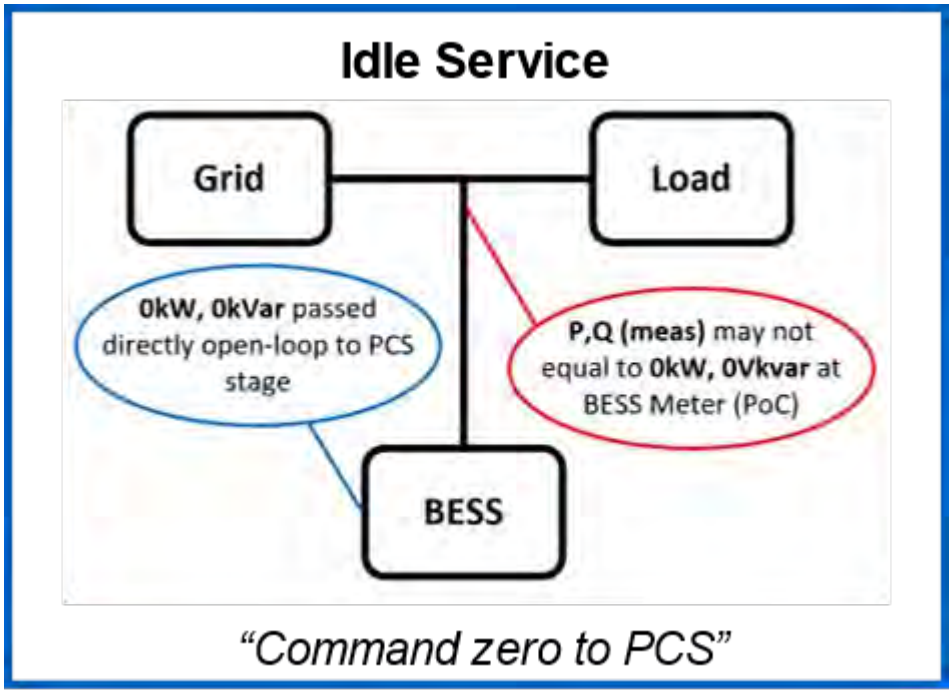

B. Peak Shaving Service

In Peak Shaving Service, the user selects a Peak Shaving Target Demand (in kW). The GSEC controller commands the PCS to regulate power at the pre-defined Site Meter power measurement location in order to achieve this target.

Optionally, the user may configure a Minimum Import Peak Shaving threshold. This threshold defines a lower bound on site import power and is used to prevent the BESS from immediately discharging when site demand slightly exceeds local generation. When this option is enabled, the Peak Shaving service also supports PV self-consumption by allowing on-site PV generation to supply the load before the BESS intervenes.

If the active power demanded at the Site Meter exceeds the Peak Shaving Target Demand, the BESS will discharge its batteries to support the load and limit the site demand to the target. If the active power demanded is below the Minimum Import Peak Shaving threshold, the BESS will charge its batteries using the available margin below this threshold.

When the active power demanded at the Site Meter is between the Peak Shaving Target Demand and the Minimum Import Peak Shaving threshold, the BESS remains idle, allowing PV generation to be self-consumed by the load without charging or discharging the battery.

The intended outcome of the Peak Shaving Service is to ensure that the power demand at the Site Meter does not exceed the Peak Shaving Target Demand, while optionally enabling PV self-consumption and controlled battery charging behavior through the Minimum Import Peak Shaving threshold.

Figure 46. Peak Shaving Service

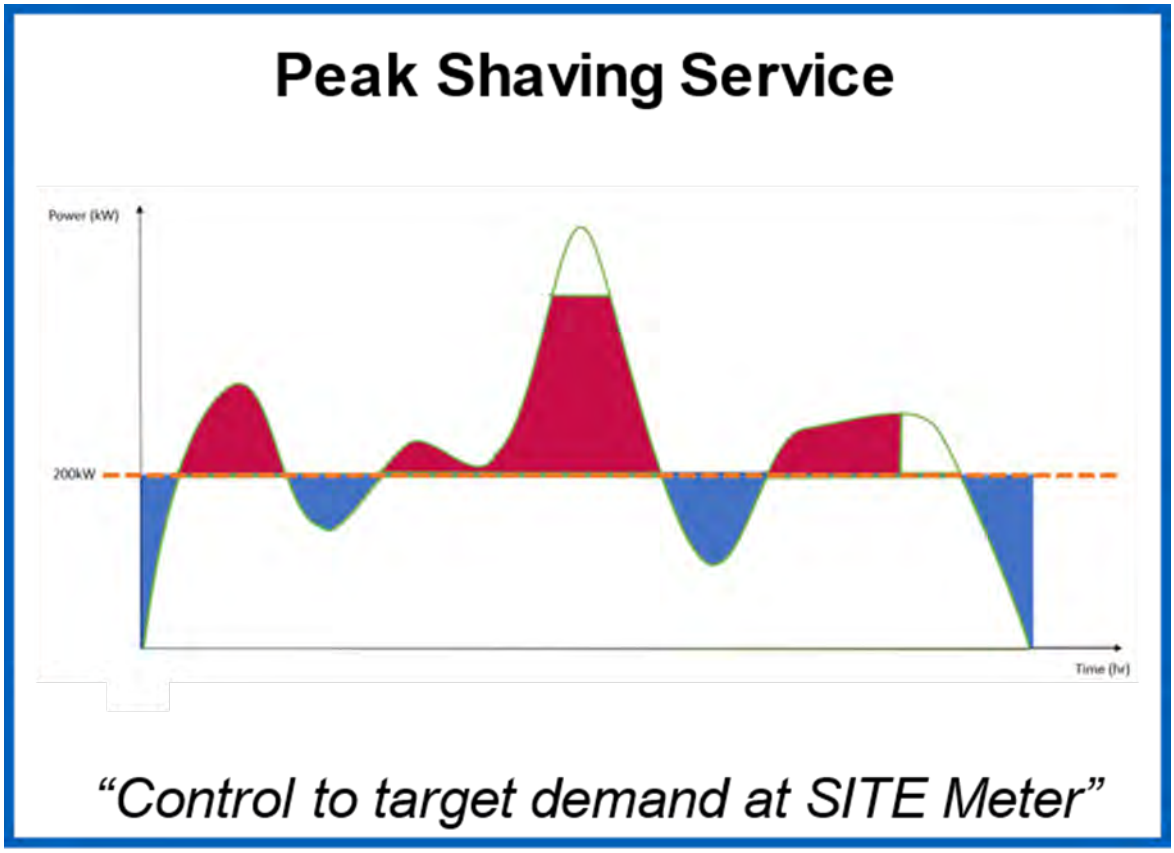

C. Target State of Charge (SoC) Service

In Target SoC Service, the user will set a target state of charge (SoC) level. If the BESS battery SoC is less than the target, the batteries will charge to meet the target level. If the BESS battery SoC is greater than the target, the batteries will discharge to meet the target level. The BESS will charge and discharge at its maximum limitation to achieve the target SoC level during this Energy Service. The charge and discharge will also still be governed by import and export limitations.

This energy service can often be used as a preparatory mode in conjunction with subsequent Energy Services or features, such as peak shaving or self-consumption, in a Time-of-Use (ToU) optimization strategy.

For example, Target SoC could be used to charge the BESS batteries to a high SoC prior to a Peak Shaving service, which desires a high SoC at the start of the service to maximize discharging capacity. Similarly, Target SoC could be used to discharge the BESS batteries to a lower SoC to provide capacity to store excess photovoltaic (PV) generation in the BESS through self-consumption.

Figure 47. Target SoC Service

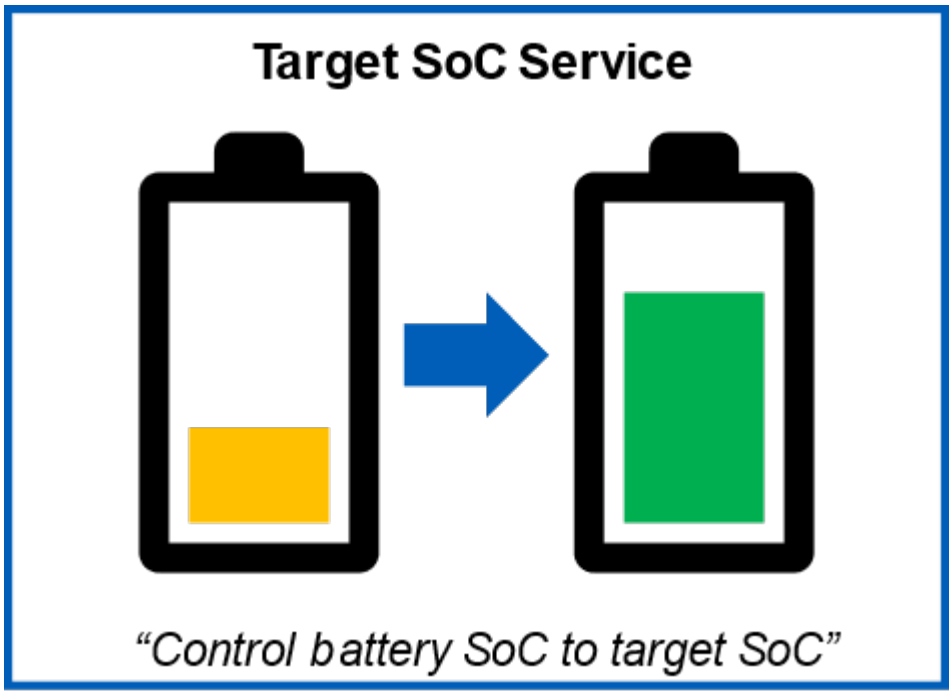

D. Maintain State of Charge (SoC) Service

Maintain SoC Service is a service that will maintain the BESS battery SoC that is observed the moment that the SoC Maintenance service begins. This service is similar to the Idle Service in that the goal is for the BESS to sit idly while connected.

However, this energy service uses SoC measurement feedback to perform closed loop control around that measurement. The system will charge or discharge at very low levels as necessary to ensure the current SoC is maintained. In contrast, over long periods of time during the Idle Service, the SoC may drift slightly since there is no feedback measurement used.

Figure 48. Maintain SoC Service

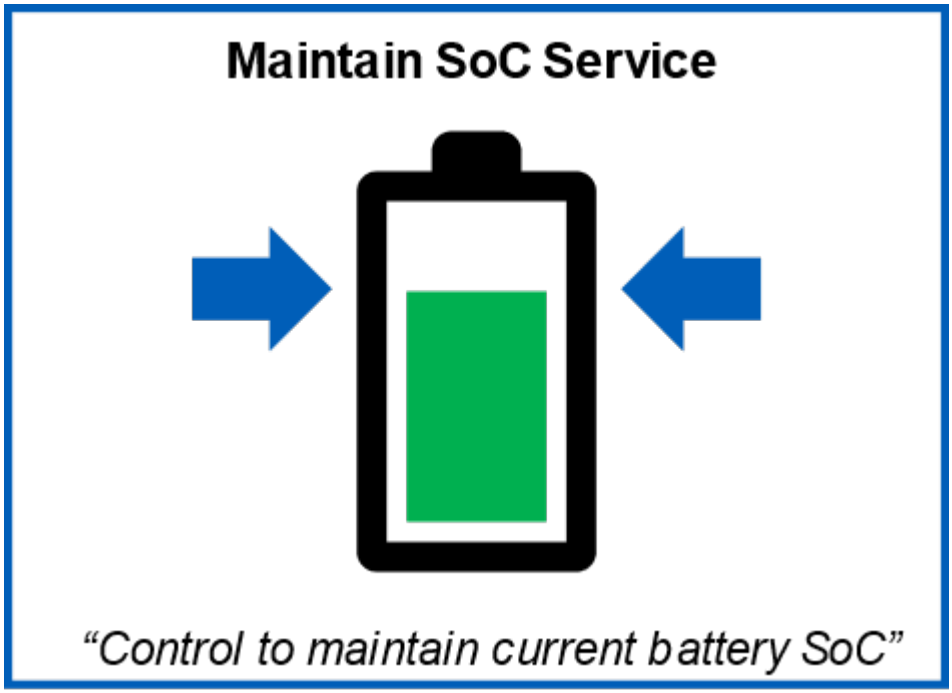

E. PQ (or Power) Setpoint Service – Open Loop

PQ Setpoint Service (also called Power Setpoint Service) has two variants, Open Loop and Closed Loop.

Open Loop is the energy service in which the user manually selects an active (P) and reactive (Q) power setpoint to pass directly to the PCS. This service serves as a general-purpose mode for the user and builds the capability for third-party control in which a higher-level, northbound controller may pass active (P) and reactive (Q) setpoints directly to the PCS through the BESS controller.

Notice

This is an open loop function. The PQ setpoints are passed directly to the PCS without any measurement from the system. Due to the control nature of the PCS in relation to the complete BESS system, the PQ setpoint may differ slightly from the value measured by the BESS Meter at the point of connection (PoC) of the BESS to the power system.

Figure 49. PQ (or Power) Setpoint Service – Open Loop

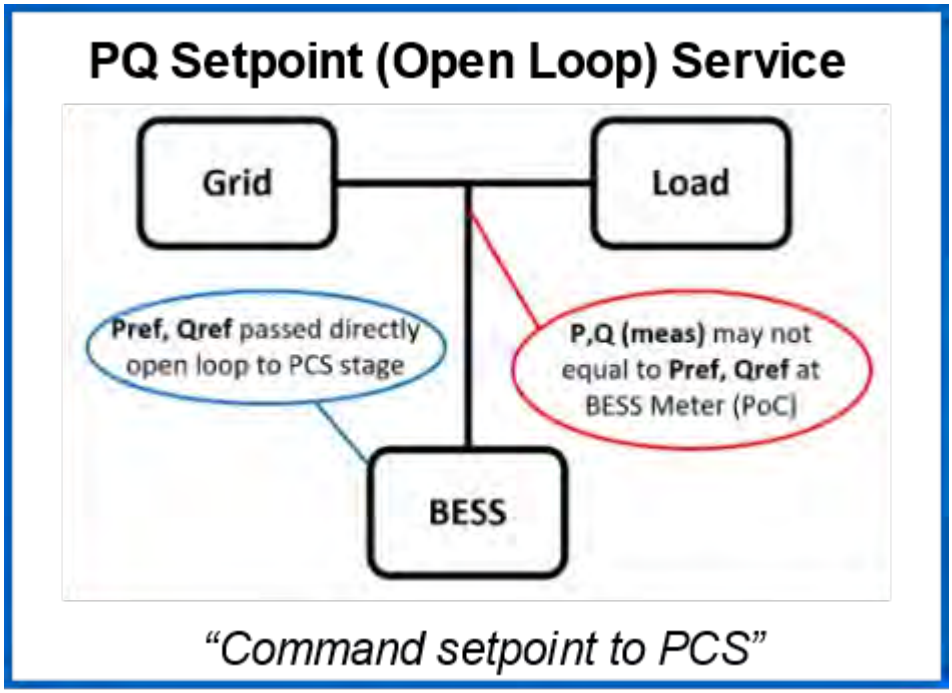

F. PQ (or Power) Setpoint Service – Closed Loop

Closed Loop is also an energy service in which the user selects active (P) and reactive (Q) power setpoints. In the closed loop variant, the BESS Meter which is placed at the PoC of the BESS to the rest of the power system provides a feedback measurement. The BESS controller will modify the internal command as necessary to realize the user setpoint at the BESS Meter location.

Figure 50. PQ (or Power) Setpoint Service – Closed Loop

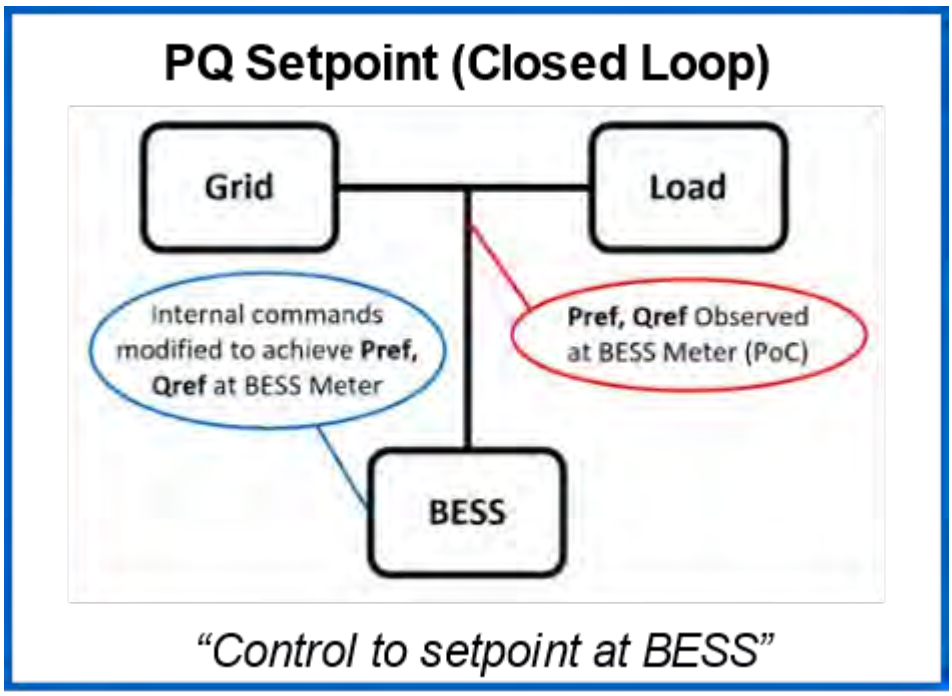

G. Zero Power Service

As a specific variant of the Closed Loop PQ Setpoint Service, this service creates a 0kW, 0kVar setpoint to be observed at the PoC of the BESS to the power system, realized at the BESS Meter.

This service ensures that the BESS has a neutral power flow in the system (no power in, no power out). This service is like the Idle Service and the Maintain SoC Service in that the intended operation for the BESS is to sit idly while connected. However, Zero Power Service uses the BESS Meter measurement feedback to perform closed loop control around that measurement. While the Idle Service may not achieve 0kW, 0kVar exactly at the BESS Meter, this service will adjust the P and Q setpoints internally to achieve zero power at the BESS Meter location.

Figure 51. Zero Power Service

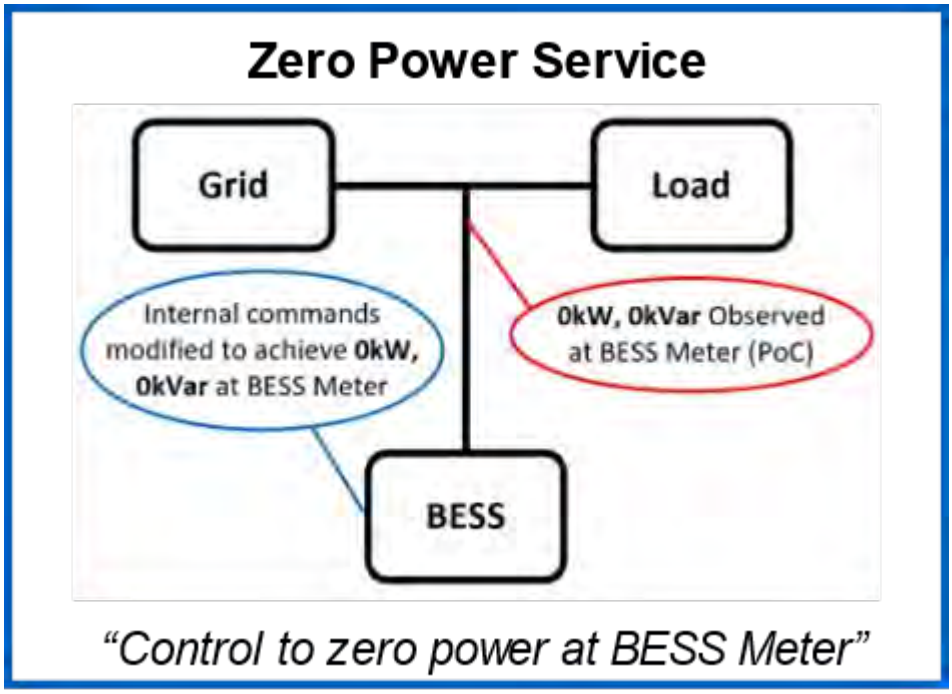

H. Energy Services Disabled

Whenever the xStorage 250-1000 is NOT operating in a grid following state, and therefore, NOT capable of exchanging power (charging/discharging) with the power system, any selected Energy Service will be disabled. The controller will bypass all algorithms and directly generate a 0kW, 0kVar command, clearing any previous commands that had been sent to the PCS stage.

Figure 52. Energy Services Disabled

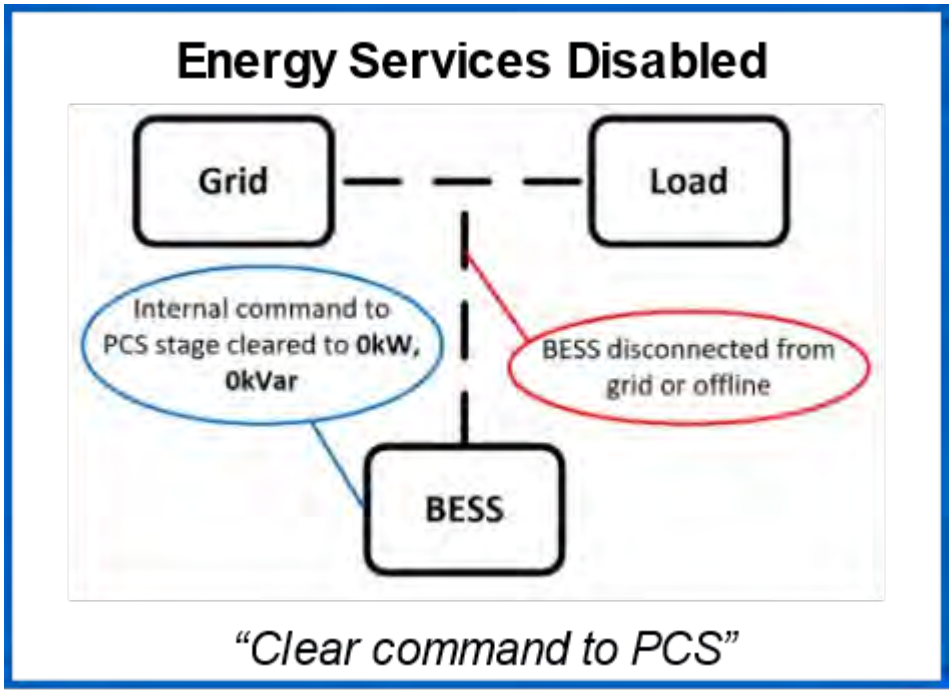

5.4.2 Operation Modes

As Energy Services are the "WHAT" of the BESS operation, the user may organize "HOW" these Energy Services are selected to operate. The "HOW" is what is referred to as Operation Modes.

There are two options for Operation Modes:

A. Constant Operation Mode

In Constant Operation Mode, the user manually selects one Energy Service with a set of configuration parameters associated to Constant Operation Mode and a set of parameters associated with the specific selected Energy Service. When grid following and operating in Constant Operation Mode, the BESS will operate given the selected Energy Service and associated parameters indefinitely until changed by the user. Constant Operation Mode is simple, static, and manual operation of the system.

B. Scheduled Operation Mode

In Scheduled Operation Mode, the user creates a schedule of Energy Services with associated configuration parameters. The scheduler service automatically enables the selected Energy Service with corresponding parameters according to the schedule. A user can schedule up to 10 events or sets of duplicate events, that repeat on a weekly cadence. Each event or set of duplicate events, will have one Energy Service selected to be enabled throughout the duration of the event as well as a set of parameters associated to the Energy Service and system operation that are unique to that event.

5.4.3 User Modes

As Energy Services are the "WHAT" of the BESS operation, Operation Modes are the "HOW", the "WHO" is defined as the User Mode.

There are two primary options for User Modes:

A. Local User Mode

Local User Mode is intended for the primary owner of the BESS, typically in standalone BESS applications and installations.

The local user configures, controls, and monitors the BESS system directly via the three internal energy management controller local interfaces:

1. Local WebApp – a graphical user interface that a user can access while on-site, connected to the control cabinet's customer port via ethernet.
2. Cloud-Based WebApp – a graphical user interface that a user can access wirelessly via the internet through the Eaton's Remote Monitoring platform. The BESS communicates to this platform natively through a cellular/ethernet connection.
3. Local Modbus TCP Interface – a Modbus TCP interface that a user can access while on-site, connected to the control cabinet's customer port via ethernet.

Local User Mode provides all state commands, all seven Energy Services and both Operation Modes to the user.

B. Remote User Mode

Remote User Mode is intended for a higher-level northbound third-party controller of the BESS. This user may or may not be the primary owner of the BESS. Typical applications include integration with microgrids, distributed energy resource (DER) aggregator, or optimizer controllers.

The remote user configures, controls, and monitors the BESS system via a northbound interface which communicates with the internal energy management controller to interact with the BESS:

1. Remote Modbus TCP Interface – a Modbus TCP interface that a user can access via ethernet communication on-site, connected to the control cabinet's customer port via ethernet.

Remote User Mode provides a reduced set of functionalities:

1. Two Energy Services
    a. PQ Setpoint (Closed Loop) Service – default
    b. PQ Setpoint (Open Loop) Service
2. Constant Operation Mode only.
3. All state commands (i.e., start and stop the BESS).

C. Autonomous State Variants of User Modes

In addition to each User Mode, there are variants that include the Autonomous, or Auto, state signifier.

1. Local User Mode (Autonomous)
2. Remote User Mode (Autonomous)

In some applications, the standalone xStorage 250-1000 can be configured to perform functions autonomously based on responding to the power system. In this case, autonomous indicates the distinction that there is no user controlling the BESS and that the BESS in essence is controlling itself autonomously.

The available autonomous function for the xStorage BESS is to detect an unhealthy grid or outage and disconnect from the utility through automatic opening of an islanding breaker. The xStorage BESS then sustains the load while operating in grid-forming mode.

Similarly, the BESS can detect that the grid has returned to a healthy state, automatically synchronize across the islanding breaker, and close back into the utility; returning to a grid-following operation mode in which power can be exchanged again via the selected energy service.

During the Autonomous state of a User Mode, the BESS is operating in grid-forming mode and establishing the grid voltage and frequency. The active (P) and reactive (Q) setpoints are unused. Because of this, Energy Services are disabled while in the Autonomous state.

The Autonomous state is meant to be added on top of the associated User Mode. For example, Local User Mode transitions to Local User Mode (Autonomous) upon a utility outage, if configured for autonomous control functions. Similarly, Remote User Mode transitions to Remote User Mode (Autonomous) upon a utility outage, if configured for autonomous control functions.

It is important to tie the Autonomous state to the User Mode, because during the Autonomous state, the user will still have access to specific controls and configurations (such as state commands to shut down the BESS), although they will be limited. The naming convention of User Modes allows the user to know which interfaces are active:

- Local User Interfaces retain limited control while in Local User Mode (Autonomous)
- Remote User Interfaces retain limited control while in Remote User Mode (Autonomous)

D. Transitioning Between User Modes

Configuration settings and control logic are used to determine which User Mode is active, and therefore, which User Interface parameters are used to control the BESS. The following transitions are valid:

- Local User Mode to/from Remote User Mode
- Local User Mode (Autonomous) to/from Remote User Mode (Autonomous)
- Local User Mode to/from Local User Mode (Autonomous)
- Remote User Mode to/from Remote User Mode (Autonomous)

As shown above, when exiting the Autonomous state, the User Mode will be maintained (i.e., the system will return to Local or Remote User Mode according to whether the system was in Local User Mode (Autonomous) or Remote User Mode (Autonomous), respectively). Transitioning between User Modes will be described in more detail in Section 6.5.

Grid-Forming operation can either be manually controlled or autonomously controlled. There are specific use cases for each and the conditions for each will be discussed in more depth in Section 6.6 and Section 7. The autonomous state only applies to the autonomously controlled grid-forming operation.

5.4.4 Limiter Functions

In normal grid following operation, the user-configured Energy Services create active (P) and reactive (Q) power commands that are passed to the PCS stage. The BESS controls include several limitation and protection functions to ensure controlled operational boundaries and protection of system equipment.

These limiters apply to the Energy Services and will modify the expected Energy Service behavior when a limit has been reached.

A. Battery State of Charge (SoC) Limiter Function

The Battery SoC Limiter will monitor the battery state of charge against user setpoints for maximum and minimum reserved setpoints during grid following operation. This limiter will modify the P and Q setpoints created by an Energy Service to avoid exceeding the limits.

1. Maximum SoC Limit
    a. Ensures that an Energy Service does not charge the BESS batteries above the user-defined limit, Maximum Reserved SoC. Power commands are modified to reduce charging or increase discharging as necessary to not exceed the limit. There are two levels.
        i. Level 1 Max SoC Limiter Active
            1) Activates when approaching the maximum SoC limit. A charge command will be reduced as the limit is approached. When the limit is reached, charging will cease.
        ii. Level 2 Max SoC Limiter Active
            1) In some cases (including those due to SoC measurement variability), the SoC may slightly exceed the maximum SoC. In these cases, a second level limiter function will become active.
            2) The goal of this limiter is to discharge the battery back to the maximum SoC. However, since the power flow direction has changed, this limiter function will become lower priority than export limiting as to not compromising export limiting.
            3) If the battery cannot discharge without compromising the export limit, the present SoC will be held until system conditions change and the SoC can be discharged back to the maximum setpoint level.
    b. The Maximum Reserved SoC Limit is set by the user and bounded by the associated service rating, Maximum SoC Rating.
2. Minimum SoC Limit
    a. Ensures that an Energy Service does not discharge the BESS batteries below the user-defined limit, Minimum Reserved SoC. Power commands are modified to reduce discharging or increase charging as necessary to not exceed the limit. There are two levels.
        i. Level 1 Min SoC Limiter Active
            1) Activates when approaching the minimum SoC limit. A discharge command will be reduced as the limit is approached. When the limit is reached, discharging will cease.
        ii. Level 2 Min SoC Limiter Active
            1) In some cases (including those due to SoC measurement variability), the SoC may slightly fall below the minimum SoC. In these cases, a second level limiter function will become active.
            2) The goal of this limiter is to charge the battery back to the minimum SoC. However, since the power flow direction has changed, this limiter function will become lower priority than import limiting (and the peak shaving service if enabled) as to not compromising these functions.
            3) If the battery cannot charge without compromising the import limit or exceeding peak shaving target demand (only when enabled), the present SoC will be held until system conditions change and the SoC can be charged back to the minimum setpoint level.
        iii. The Minimum Reserved SoC Limit is set by the user and bounded by the associated service rating, Minimum SoC Rating.

B. Site Power Limiter Function

The Site Power Limiter function monitors power flowing into and out of the site at the Site Meter location during grid following operation. This limiter will modify the P and Q setpoints created by an Energy Service to avoid exceeding the limits set by the user. Site Power Limiting is the only of the limiter functions that can be disabled by the user.

Site power limits are often driven and bounded by utility agreements that may vary on a site-by-site basis.

1. Import Power Limit
    a. The import limit is the maximum allowable active power to flow from the utility into the local power system, measured at the Site Meter.
    b. Power commands are modified to reduce charging or increase discharging as necessary to not exceed the limit. For example, in a case with a large load relative to the import limit, the batteries may begin to discharge to maintain the import limit.
    c. The Import Limit is set by the user and bounded by the associated service rating, Import Limit Max.
2. Export Power Limit
    a. The export limit is the maximum allowable active power to flow from the BESS towards the utility measured at the Site Meter.
    b. Power commands are modified to reduce discharging or increase charging as necessary to not exceed the limit. For example, in a case where a photovoltaic (PV) source is installed into the local power system, the PV source is seen as a negative load. If the PV generation is relatively large compared to the total load, the batteries may begin to charge to maintain the export limit and capture excess PV. This feature, referred to as Self-Consumption, will be discussed in Section 5.4.5.
    c. The Export Limit is set by the user and bounded by the associated service rating, Export Limit Max.

C. Active Power Saturation Limiter Function

The Active Power Limiter function is a protective function to ensure that no active power (P) command exceeds the present limitation of the BESS system and its components. This limiter will modify the P setpoints created by an Energy Service to avoid exceeding the limits.

1. Maximum Discharge (Positive) Active Power Limit
    a. Ensures that an Energy Service does not command an active power setpoint which exceeds the limit.
    b. Limit determined by most restrictive of three sources of limitation:
        i. User setting, Maximum Active Power Discharge Rate, which is bounded by an associated service limit, Maximum Active Power Discharge Rating.
        ii. PCS dynamic limitation on active power, which may vary due to conditions such as temperature, voltage, etc.
        iii. Battery dynamic limitation active power, which may vary due to conditions such as temperature, voltage, SoC, etc.
2. Maximum Charge (Negative) Active Power Limit
    a. Ensures that an Energy Service does not command an active power setpoint which exceeds the limit.
    b. Limit determined by most restrictive of three sources of limitation:
        i. User setting, Maximum Active Power Charge Rate, which is bounded by an associated service limit, Maximum Active Power Charge Rating.
        ii. PCS dynamic limitation on active power, which may vary due to conditions such as temperature, voltage, etc.

iii. Battery dynamic limitation active power, which may vary due to conditions such as temperature, voltage, SoC, etc.

D. Reactive Power Saturation Limiter Function

The Reactive Power Limiter function is a protective function to ensure that no reactive power (P) command exceeds the present limitation of the BESS system and its components. This limiter will modify the Q setpoints created by an Energy Service to avoid exceeding the limits.

1. Maximum Absorb (Positive) Reactive Power Limit
   a. Ensures that an Energy Service does not command a reactive power setpoint which exceeds the limit.
   b. Limit determined by most restrictive of two sources of limitation:
      i. User setting, Maximum Reactive Power Absorb Rate, which is bounded by an associated service limit, Maximum Reactive Power Absorb Rating.
      ii. PCS dynamic limitation on reactive power, which may vary due to conditions such as temperature, voltage, etc.
2. Maximum Inject (Negative) Reactive Power Limit
   a. Ensures that an Energy Service does not command a reactive power setpoint which exceeds the limit.
   b. Limit determined by most restrictive of two sources of limitation:
      i. User setting, Maximum Reactive Power Inject Rate, which is bounded by an associated service limit, Maximum Reactive Power Inject Rating.
      ii. PCS dynamic limitation on reactive power, which may vary due to conditions such as temperature, voltage, etc.

E. Current Saturation Limiter Function

The Current Saturation Limiter function is a protective function that ensures that the customer installation does not import from or export to the grid more current than the limits agreed with the Distribution Network Operator at the Point of Connection, ensuring grid-code compliance. This function sends active and reactive current saturation limits to the PCS which results in the current saturation of the BESS.

Four current limits can be configured in the Local and Remote User Interfaces:

1. Maximum Discharge (Positive) Active Current Limit
2. Maximum Charge (Negative) Active Current Limit
3. Maximum Absorb (Positive) Reactive Current Limit
4. Maximum Inject (Negative) Reactive Current Limit

The user can enable or disable the activation of these limits:

1. When enabled, the limits take effect and the PCS current is then saturated.
2. When disabled, the limits are removed and the PCS current limit is returned to its rated current limits defined during commissioning.

F. Apparent Power Priority Limiter Function

The Apparent Power Priority Limiter function uses a user-defined priority setting that establishes how to resolve conflicts between active and reactive power commands exceeding the PCS apparent power rating. This limiter will modify the P and Q setpoints created by an Energy Service to avoid exceeding the apparent power rating of the system.

Modification to the setpoints by the Apparent Power Priority Limiter is only done after both the P and Q command have been saturated by the Active and Reactive power limiter functions. This ensures that the total commanded apparent power is fully maximized before prioritizing. There are three options:

1. Active Power Priority
   a. Reduce reactive power command until apparent power limit is not exceeded.
2. Reactive Power Priority
   a. Reduce active power command until apparent power limit is not exceeded.
3. Power Angle Priority
   a. Reduce both active and reactive power commands proportionally, maintaining power angle of the initial command, until apparent power limit is not exceeded.

F. Ramp Rate Limiter Function

The Ramp Rate Limiter function is an internal function used to limit the rate of change between two sequential power setpoint commands. The ramp rate is configurable and is defined in percent per second (%/s).

5.4.5 Additional Grid Following Features

A. Self-Consumption

If a user elects to add another distributed energy resource (DER) into the local power system, such as a photovoltaic (PV) installation, a user may utilize the BESS export limit or the minimum import peak shaving threshold to perform a passive self-consumption strategy, to minimize waste of the DER resource generation.

In the case of a PV source, the BESS system observes any PV generation as a negative load into the system. In situations where the PV source is sized such that it has the potential to exceed the load as seen in the figure below, the BESS provides a unique feature to be able capture excess PV generation to store in its batteries.

Figure 53. Example of PV Source Overproduction

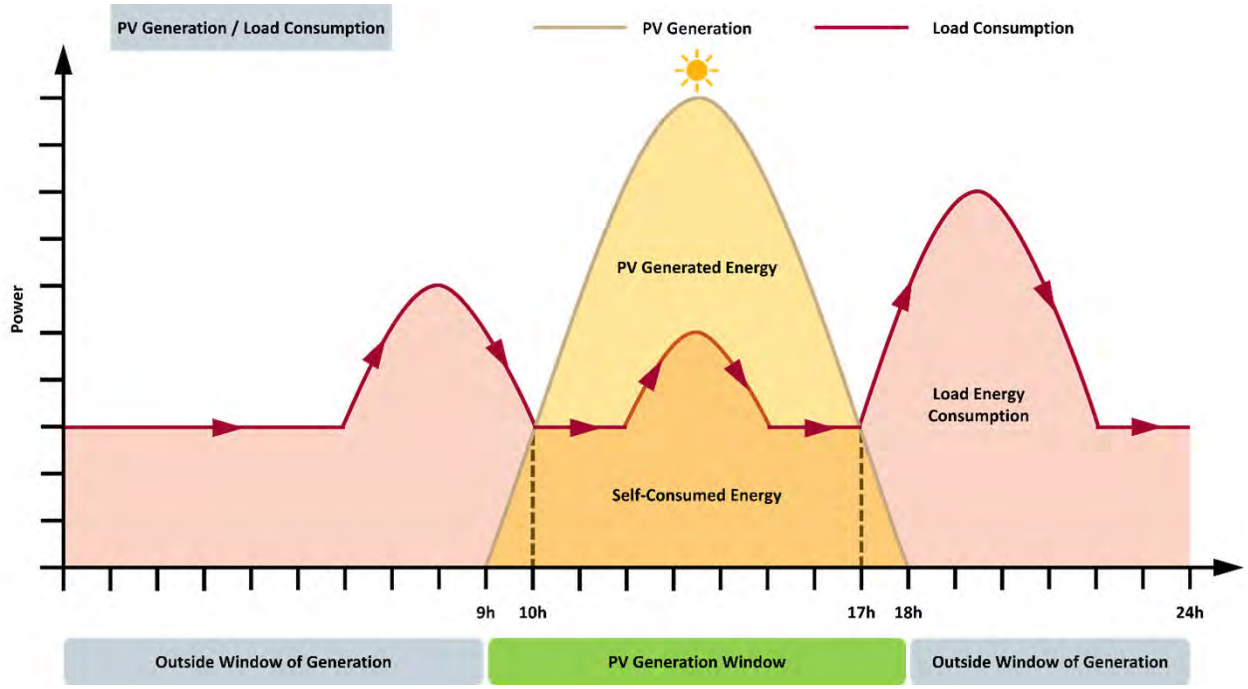

The BESS captures excess PV generation and performs a self-consumption function through the use of its export limit or the minimum import peak shaving threshold .

NOTICE

In order for export limiting to capture excess PV generation, the AC connection of the PV source must be within the local power system defined at the Site Meter location.

As an example, the export limit is set at 0 kW to maximize use of the PV source to offset the load and to minimize any excess power flowing back towards the utility. This implies that the BESS controls will modify its active power command as needed to not exceed this limit.

An example sequence of steps is as follows:

1. At the start of the scenario, P_{SITE} is greater than P_{PV}. This implies that the net load seen at the utility is more than what the PV source is producing. Energy Services determine the BESS setpoints and the BESS can charge or discharge accordingly. For this example, the BESS is discharging.
2. A reduction in load demand results in a reducing P_{SITE} measurement. As this measurement approaches the export limit, the BESS discharging reduces.
3. Eventually, the load reduces enough that the PV generation is completely offsetting the remaining load. The BESS discharging has ceased.
4. The load continues to reduce, and the PV generation remains constant. The effect of this will be a negative power flowing back towards the utility. To maintain the export limit of 0kW, the BESS begins to charge ultimately capturing excess PV generation to store in the batteries.
5. Battery charging is still limited by active power and maximum SoC limitations, however. These will take priority and if the load continues to reduce or PV production increases, any additional excess will flow back towards the utility or be controlled separately according to the PV source's utility agreement.

The figure below, illustrates this scenario.

Figure 54. Example of PV Source Overproduction

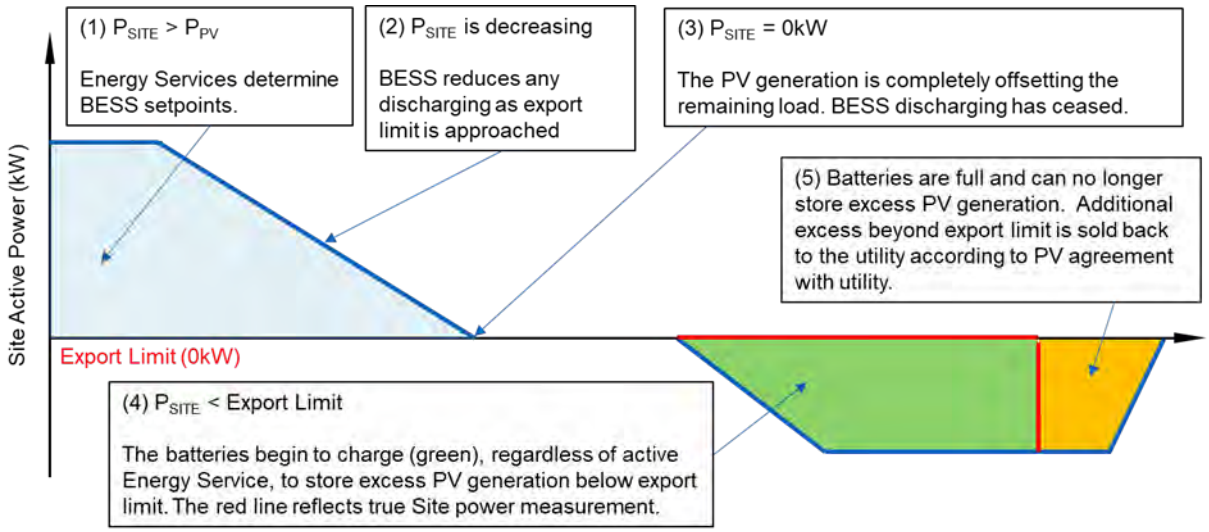

There are two specific constraints on this self-consumption feature:

1. The BESS shall NOT attempt to control the PV source directly NOR curtail its generation. The BESS will simply view PV generation as a negative load.
2. The BESS will attempt to capture generation but may be limited by a Maximum SoC limit when the batteries are fully charged or if a Maximum Charge Power Rate limit has been met. Any limitation may result in excess PV generation flowing back towards the utility. A standalone BESS shall not be responsible for ensuring no reverse power flow from the PV source to the utility.

5.4.6 Overall Prioritization Strategy

The intended operation of the BESS controller in grid following operation is to determine active (P) and reactive (Q) power setpoints based on user configurations of Energy Services, selected Operation Modes, and limiter functions.

Each User Mode will have a set of configurations and access to controls. To determine which configurations and controls to use, the BESS controller establishes a prioritization scheme. Internal logic is used to determine whether to be in the Autonomous State, Remote User Mode, or Local User Mode. From there, the associated configurations are passed to the control algorithms and control commands are accepted from the associated user interfaces. Figure 36, below, illustrates the prioritization order and flow of data from user interface to PCS stage PQ command.

Figure 55. BESS Prioritization Strategy and Data Flow

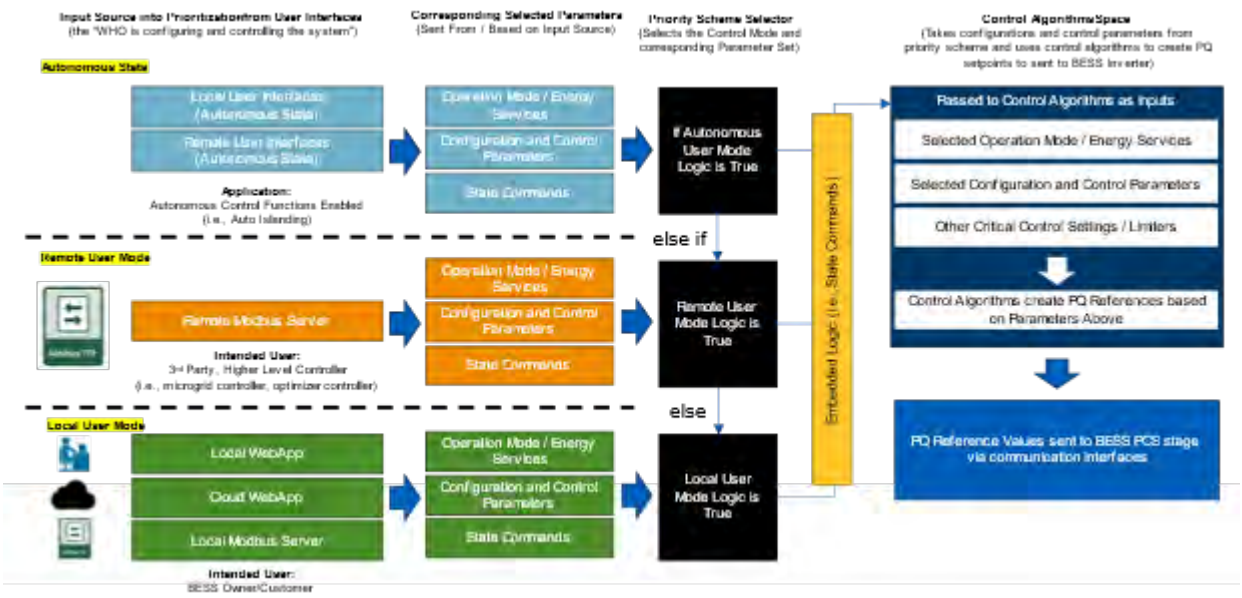

5.5 Grid Forming BESS Operation

The xStorage 250-1000 has the capability to operate in both grid following and grid forming operation.

In grid following operation while connected to the grid source, Energy Services can be used to generate active (P) and reactive (Q) power setpoints to command to the PCS. This results in charging and discharging of the BESS batteries.

In grid forming operation, the BESS is controlled to establish and/or maintain the local grid voltage and frequency, rather than to achieve a power setpoint. Grid forming operation of the BESS is used while disconnected from the grid source.

Depending on application and configuration, grid-forming operation can be used in standalone BESS applications and those integrated into a larger power system such as a microgrid.

5.5.1 Standalone BESS Applications

A standalone BESS application is one in which the system consists only of the utility grid connection, aggregated load, and BESS. The system is strictly not a microgrid, though a PV DER may be added and integrated as a negative load to standalone BESS systems. The user can be a Local User (using the various user interfaces defined above) or a Remote User (using the remote modbus server interface). However, in a standalone system, if a remote user is present, it must be a higher-level controller dedicated to the BESS. If the controller manages other resources as well, the system may be a microgrid and the following may not apply to it.

In a standalone BESS application, the customer has the option to select an Automatic Grid Forming Control option. Given this option, the following features are enabled:

1. User initiated black start.
    a. A user can start the BESS in grid forming mode off-grid (disconnected from the utility at an islanding interconnect breaker) and establish an island.
    b. The BESS will establish the voltage and frequency of the localized island and provide power to the predefined loads included in the island.
    c. Black start capability can be used with or without a healthy grid, but the islanding interconnect breaker must be open in order to start off-grid.
    d. The control cabinet UPS must have sufficient charge to enable black start capability.
2. Automatic detection, disconnection, and islanding upon grid loss.
    a. The BESS will automatically detect when the grid conditions have become unhealthy due to an outage or other conditions.
    b. Upon detection, the BESS will command the islanding interconnect breaker to open to isolate from the utility, ensuring no reverse power flow.
    c. The BESS will then transition to grid forming mode and establish and maintain the local island.
3. Automatic detection and reconnect upon grid return.
    a. The BESS will automatically detect when the grid conditions have been restored.
    b. Upon detection, the BESS will synchronize across the islanding interconnect breaker, close the breaker, and transition back to grid following operation.
    c. User input is not required in any of these steps.

Figure 56 shows the addition of the islanding interconnect breaker (denoted MX2) to a standalone system. Note that to enable full functionality, in addition to software configuration, control hardware additions are required.

- Remote voltage sense wires to enable detection and synchronization.
- The islanding control relay circuit that interfaces with breaker operation.
- Two signal wires from the PCS stage that interface with the relay circuit to enable automatic breaker control.

Figure 56. BESS Standalone System with Automatic Islanding Control

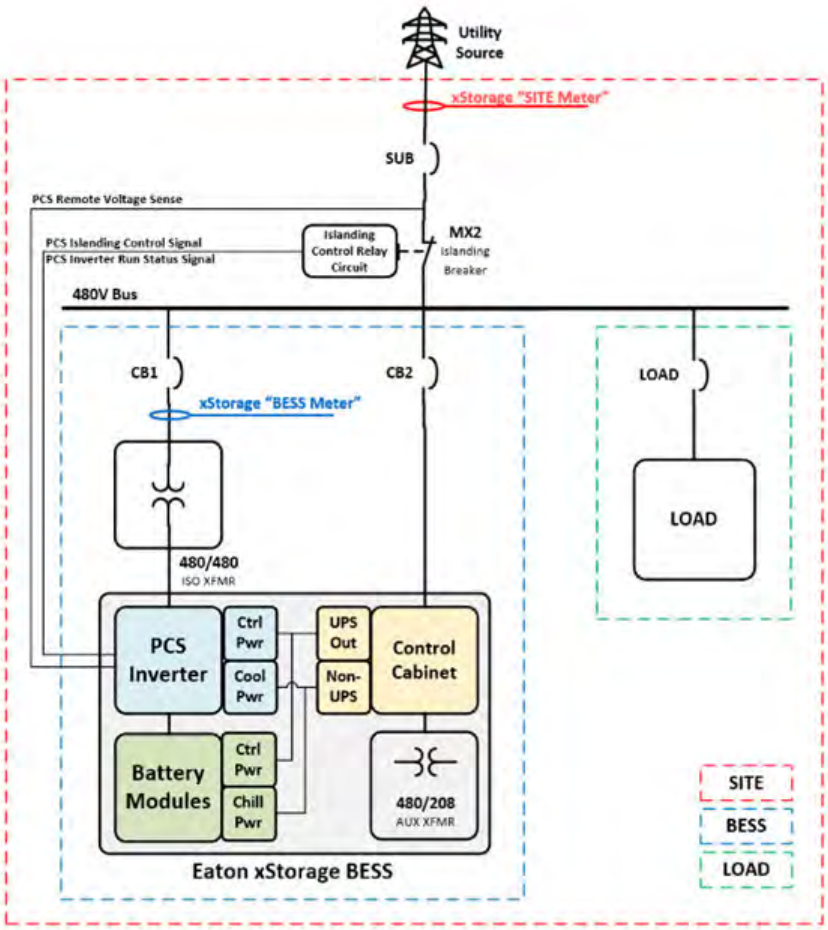

Since the xStorage BESS shall not curtail generation from any additional DERs in a standalone configuration; there are two critical constraints for including DERs, specifically PV for self-consumption, when the Automatic Grid Forming Control scheme has been implemented shown in the figure below:

1. The PV connection must be upstream of the MX2 Interconnect Device.
    a. The predefined island (feed from MX2) must only include the BESS and loads that total no more than the maximum BESS rating at full load.
2. To properly capture self-consumption of excess PV, the SITE Meter sensing must be upstream of the PV connection.

In a standalone installation with both Automatic Grid Forming Control and a PV source where self-consumption is desired, the PV connection must be made upstream of the MX2 breaker and downstream of SITE Meter sensing.

Figure 57. BESS Standalone System with PV Self-Consumption

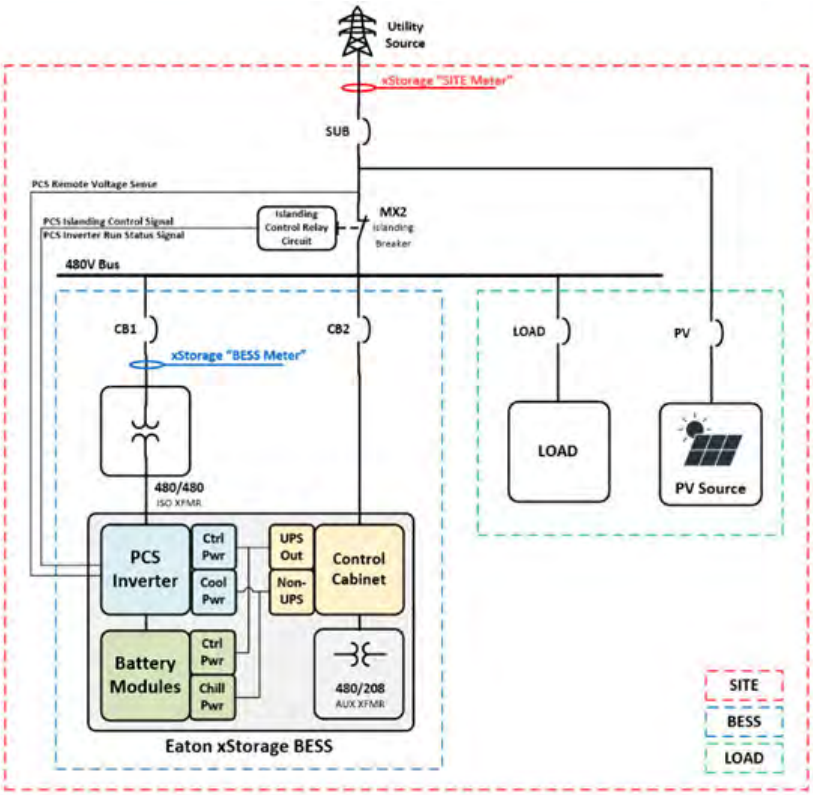

NOTICE

Manual transitions between grid following and forming in standalone systems are not supported.

5.5.2 Microgrid Applications

In systems where multiple DERs are managed together to support the load (such as BESS, PV, generator, etc.), a higher-level microgrid controller will manage the xStorage 250-1000 as a DER asset in the greater microgrid. The microgrid controller will act as a remote user and use the Remote Modbus Server as an interface to control the BESS. Furthermore, a simplified set of functions are exposed through the Remote Modbus Server to allow the microgrid controller to perform state commands (i.e., start and stop) as well as directly set active (P) and reactive (Q) setpoints.

If selected as an option, the BESS can operate in grid forming mode as well when integrated into a microgrid. By contrast to the standalone BESS case, the microgrid controller will manually control grid following and grid forming transitions via the Modbus interface. Automatic Grid Forming Control is not supported for microgrid applications since the microgrid controller manages all operations of all sources.

In a microgrid application, given that the Manual Grid Forming Control scheme is installed and enabled, the following features are available:

1. Microgrid controller initiated black start.
    a. A user can start the BESS in grid forming mode off-grid (disconnected from the utility at an islanding interconnect breaker) and establish an island.

   b. The BESS will establish the voltage and frequency of the localized island and provide power to the predefined loads included in the island.
   c. Black start capability can be used with or without a healthy grid, but there must be no local AC grid available at the BESS terminals to startup in grid forming.
   d. The control cabinet UPS must have sufficient charge to enable black start capability.
2. Manual transition from grid following to grid forming.
   a. If a closed transition intentional island sequence is desired, the microgrid controller can use the state commands to first go to grid forming.
   b. This will parallel the grid source (or another voltage forming source) in grid forming (voltage controlled) mode, following the voltage and frequency reference inputs.
   c. Thereafter, the microgrid controller can open the islanding breaker to isolate from the utility and the BESS will continue to operate as the grid forming source.
3. Manual transition from grid forming to grid following.
   a. If a closed transition reconnect to the utility across an islanding interconnect breaker is desired, the microgrid controller can use the state commands to first go to grid forming.
   b. Important to note, the BESS makes available both a command to synchronize its grid forming voltage, frequency, and phase to the remote sensed voltage, as well as a status flag of synchronization. It is up to the microgrid controller to monitor and request synchronization. The BESS will NOT manage this behavior.
   c. Upon synchronization, the microgrid controller can close the islanding interconnect breaker. The BESS will remain in grid forming (voltage-controlled mode) and be in parallel with the utility (or other voltage forming source).
   d. At this point, the microgrid controller can use the state command to go to grid following. The BESS will return to a grid following state and accept active (P) and reactive (Q) setpoint commands again.

Similar to the standalone application, a software configuration must be selected as well as hardware added to enable Manual Grid Forming Control for microgrid solutions. The following hardware must be included:

- Remote voltage sense wires to enable detection and synchronization.

NOTICE

Since the microgrid controller owns control of the islanding interconnect breaker, there is no BESS product hardware requirement for an islanding control relay kit or the signal wires from the PCS.

NOTICE

Automatic transitions between grid following and grid forming in microgrid systems are not supported.

Chapter 6 Configuration, Control, and User Interfaces

In order to properly configure, control, and monitor the BESS, a user will have access to various parameters through the user interfaces introduced in Chapter 5 *Understanding BESS Operation*. This Chapter details the parameters available to the user as well as how they may be accessed via the user interfaces.

6.1 Parameter List

The list of user parameters is divided into four main groups:

1. Settings – for configuration of Energy Services, limits, etc.
2. Controls – for state commands and clear commands
3. Monitoring – for measured system data and states
4. Alarms – for alarm status and diagnosis

There are also other parameters that do not fit into these groups which relate to communications with external controllers. The following sections list and describe each parameter relevant to the user.

Table 18 shows a prefix naming convention used for the xStorage BESS parameters to differentiate them and distinguish from which interface they can be edited.

Table 18. xStorage 250-1000 Parameter Prefixes

Prefix	Group	Definition
LOCAL_COM	Setting	Constant Operation Mode specific settings for Local User Mode
LOCAL_SET	Setting	General settings for Local User Mode
LOCAL_UEx	Setting	User Event specific setting for Local User Mode (x = 1,2,3…10)
REMOTE_SET	Setting	General settings for Remote User Mode
SERVICE_SET	Setting	Service settings
SYSCONFIG	Setting	System configuration options/parameters
CMD	Control	Command parameters
BATT	Monitoring	Battery Measurements
BESS	Monitoring	BESS Meter Measurements
LOAD	Monitoring	Load Calculations
PCS	Monitoring	PCS Measurements
SITE	Monitoring	Site Meter Measurements
STATE	Monitoring	State Monitoring parameters
SBMUx	Monitoring	Battery detailed state of health parameters
ALARM_BESS	Alarm	BESS Alarm parameters
ALARM_GPIO	Alarm	GPIO Alarm parameters
ALARM_BATT	Alarm	Battery Alarm parameters

Table 18. xStorage 250-1000 Parameter Prefixes (Continued)

Prefix	Group	Definition
ALARM_PCS	Alarm	PCS Alarm parameters
HB	Other	Heartbeat parameters

6.1.1 Settings

Table 19. xStorage 250-1000 Settings Parameters

Parameter Name	Description	Access
LOCAL_COM_ EnableMinimumImport	Local User Setting - Constant Operation - Enable Minimum Import	Local User Interfaces
	Local User setting to enable the Peak Shaving Minimum Import threshold control operation in Constant Operation Mode.	
	[0] Peak Shaving Minimum Import Disabled [1] Peak Shaving Minimum Import Enabled	
LOCAL_COM_EnergyService	Local User Setting - Constant Operation - Selected Energy Service	Local User Interfaces
	Local User selected Energy Service while in Constant Operation Mode.	
	[1] Idle Service (Default)[2] Peak Shaving Service[3] Target SoC Service[4] PQ Setpoint (Open Loop) Service[5] PQ Setpoint (Closed Loop) Service[6] Zero Power Service[7] Maintain SoC Service	
LOCAL_COM_ExportLimit	Local User Setting - Constant Operation - Export Limit	Local User Interfaces
	Local User defined maximum allowable active power to be exported to the Grid from the Site as a result of BESS operation during Constant Operation Mode.	
	Units: kWMin: 0, Max: SERVICE_SET_ExportLimitMaxDefault: SERVICE_SET_ ExportLimitMax	
LOCAL_COM_ImportLimit	Local User Setting - Constant Operation - Import Limit	Local User Interfaces
	Local User defined maximum allowable active power to be imported from the Grid to the Site as a result of BESS operation during Constant Operation Mode.	
	Units: kWMin: 0, Max: SERVICE_SET_ImportLimitMaxDefault: SERVICE_SET_ ImportLimitMax	
LOCAL_COM_MaxAbsorb	Local User Setting - Constant Operation - Max Reactive Power Absorb Rate	Local User Interfaces
	Local User defined maximum allowable reactive power absorption rate of the PCS during Constant Operation Mode.	
	Units: kVarMin: 0, Max: SERVICE_SET_MaxAbsorbRtgDefault: SERVICE_SET_ MaxAbsorbRtg	
LOCAL_COM_MaxCharge	Local User Setting - Constant Operation - Max Active Power Charge Rate	Local User Interfaces
	Local User defined maximum allowable active power charge rate of the PCS during Constant Operation Mode.	
	Units: kWMin: 0, Max: SERVICE_SET_MaxChargeRtgDefault: SERVICE_SET_MaxChargeRtg	

Table 19. xStorage 250-1000 Settings Parameters (Continued)

Parameter Name	Description	Access
LOCAL_COM_MaxDischarge	Local User Setting - Constant Operation - Max Active Power Discharge Rate	Local User Interfaces
	Local User defined maximum allowable active power discharge rate of the PCS during Constant Operation Mode.	
	Units: kWMin: 0, Max: SERVICE_SET_MaxDischargeRtgDefault: SERVICE_SET_ MaxDischargeRtg	
LOCAL_COM_MaxInject	Local User Setting - Constant Operation - Max Reactive Power Inject Rate	Local User Interfaces
	Local User defined maximum allowable reactive power injection rate of the PCS during Constant Operation Mode.	
	Units: kVarMin: 0, Max: SERVICE_SET_MaxInjectRtgDefault: SERVICE_SET_MaxInjectRtg	
LOCAL_COM_ PeakShavingMinimumImport	Local User Setting - Constant Operation - Peak Shaving Target Demand	Local User Interfaces
	Local User defined lowest allowable grid import power threshold measured at the Site Meter that the controller will maintain during Peak Shaving Energy Service in Constant Operation Mode. Becomes effective if the Enable Minimum Import parameter is set to True.	
	Units: kW, Min: 0, Max 65,535, Default: 0	
LOCAL_COM_PeakShavingTarget	Local User Setting - Constant Operation - Peak Shaving Target Demand	Local User Interfaces
	Local User defined target demand power to be delivered by the utility as measured at the Site Meter for the Peak Shaving Energy Service during Constant Operation Mode.	
	Units: kWMin: 0, Max 65,535Default: 0	
LOCAL_COM_PQClosedLoop_P	Local User Setting - Constant Operation - PQ Closed Loop P Setpoint	Local User Interfaces
	Local User defined active power setpoint to be observed at the BESS Meter while using the PQ Setpoint (Closed Loop) service during Constant Operation Mode. A positive command implies discharging. A negative command implies charging.	
	Units: kWMin: -3,276.8, Max: 3,276.7Default: 0	
LOCAL_COM_PQClosedLoop_Q	Local User Setting - Constant Operation - PQ Closed Loop Q Setpoint	Local User Interfaces
	Local User defined reactive power setpoint to be observed at the BESS Meter while using the PQ Setpoint (Closed Loop) service during Constant Operation Mode. A positive command implies absorbing. A negative command implies injecting.	
	Units: kVarMin: -3,276.8, Max: 3,276.7Default: 0	
LOCAL_COM_PQOpenLoop_P	Local User Setting - Constant Operation - PQ Open Loop P Setpoint	Local User Interfaces
	Local User defined active power setpoint to be commanded directly to the PCS while using the PQ Setpoint (Open Loop) service during Constant Operation Mode. A positive command implies discharging. A negative command implies charging.	
	Units: kWMin: -3,276.8, Max: 3,276.7Default: 0	

Table 19. xStorage 250-1000 Settings Parameters (Continued)

Parameter Name	Description	Access
LOCAL_COM_PQOpenLoop_Q	Local User Setting - Constant Operation - PQ Open Loop Q Setpoint	Local User Interfaces
	Local User defined reactive power setpoint to be commanded directly to the PCS while using the PQ Setpoint (Open Loop) service during Constant Operation Mode. A positive command implies absorbing. A negative command implies injecting.	
	Units: kVarMin: -3,276.8, Max: 3,276.7Default: 0	
LOCAL_COM_TargetSoC	Local User Setting - Constant Operation - Target SoC Setpoint	Local User Interfaces
	Local User defined target State of Charge for the batteries to charge or discharge to while using the Target SoC service during Constant Operation Mode.	
	Units: %Min: LOCAL_SET_MinReservedSoC, Max: LOCAL_SET_MaxReservedSoCDefault: LOCAL_SET_MaxReservedSoC	
LOCAL_SET_ApparentPowerPriority	Local User Setting - Apparent Power Priority	Local User Interfaces
	Local User defined priority setting that establishes how to resolve conflicts between real and reactive power commands.	
	[1] Active Power Priority (Default)[2] Reactive Power Priority[3] Power Angle Priority	
LOCAL_SET_ DisableSitePowerLimiting	Local User Setting - Disable Site Power Limiting	Local User Interfaces
	Local User setting to disable Site Power limiting during operation. Site Power limits (import and export) are enabled by default.	
	[0] Site Power Limiting Enabled (Default)[1] Site Power Limiting Disabled	
LOCAL_SET_EnableCurrentLimit	Local Setting - PCS Limit - Enable Current Limitation	Local User Interfaces
	Local User setting to enable or disable PCS current limitation, based on current operating conditions.	
	[0] Current Limitation Disabled [1] Current Limitation Enabled	
LOCAL_SET_FormingRef_Freq	Local User Setting - Frequency Reference while in Grid Forming	Local User Interfaces
	Local User defined frequency reference during Grid-Forming operation.	
	Units: HzMin: 0.9*SERVICE_SET_NomACFrequencyRtgMax: 1.1*SERVICE_SET_ NomACFrequencyRtgDefault: SERVICE_SET_NomACFrequencyRtg	
LOCAL_SET_FormingRef_Volt	Local User Setting - Voltage Reference while in Grid Forming	Local User Interfaces
	Local User defined voltage reference during Grid-Forming operation.	
	Units: VMin: 0.9*SERVICE_SET_NomACVoltageRtgMax: 1.1*SERVICE_SET_ NomACVoltageRtgDefault: SERVICE_SET_NomACVoltageRtg	
LOCAL_SET_IdMax	Local Setting - PCS Limit - Real Current Positive Limit	Local User Interfaces
	Real positive current limit for the PCS based on current operating conditions.	
	Units: A, Min: 0, Max: 1250, Default: 1250	

Table 19. xStorage 250-1000 Settings Parameters (Continued)

Parameter Name	Description	Access
LOCAL_SET_IdMin	Local Setting - PCS Limit - Real Current Negative Limit	Local User Interfaces
	Real negative current limit for the PCS based on current operating conditions.	
	Units: A, Min: -1250, Max: 0, Default: -1250	
LOCAL_SET_IqMax	Local Setting - PCS Limit - Reactive Current Positive Limit	Local User Interfaces
	Reactive positive current limit for the PCS based on current operating conditions.	
	Units: A, Min: 0, Max: 1250, Default: 1250	
LOCAL_SET_IqMin	Local Setting - PCS Limit - Reactive Current Negative Limit	Local User Interfaces
	Reactive negative current limit for the PCS based on current operating conditions.	
	Units: A, Min: -1250, Max: 0, Default: -1250	
LOCAL_SET_MaxReservedSoC	Local User Setting - Max Reserved SoC	Local User Interfaces
	Local User defined maximum battery State of Charge allowed during the operation of Energy Services. Energy Services will be limited when this boundary is reached.	
	Units: %Min: SERVICE_SET_MinSoCRtg, Max: SERVICE_SET_MaxSoCRtgDefault: SERVICE_SET_MaxSoCRtg	
LOCAL_SET_MinReservedSoC	Local User Setting - Min Reserved SoC	Local User Interfaces
	Local User defined minimum battery State of Charge allowed during the operation of Energy Services. Energy Services will be limited when this boundary is reached.	
	Units: %Min: SERVICE_SET_MinSoCRtg, Max: SERVICE_SET_MaxSoCRtgDefault: SERVICE_SET_MinSoCRtg	
LOCAL_SET_NoEventDefaultService	Local User Setting - Default Service When No Event Scheduled	Local User Interfaces
	Local User selected Default Energy Service in Scheduled Operation Mode when no Event is active.	
	[1] Idle Service (Default)[7] Maintain SoC Service	
LOCAL_SET_OperationMode	Local User Setting - Selected Operation Mode	Local User Interfaces
	Local User selected Operation Mode during BESS operation.	
	[0] Constant Operation Mode (Default)[1] Scheduled Operation Mode	
LOCAL_SET_RemoteUserAllowed	Local User Setting - Remote User Allowed	Local User Interfaces
	Local User setting to enable and disable a Remote Local User's ability to take control of the BESS.	
	[0] Remote User Not Allowed (Default)[1] Remote User Allowed	

Table 19. xStorage 250-1000 Settings Parameters (Continued)

Parameter Name	Description	Access
LOCAL_UEx_DuplicateDays	Local User Setting - Event x - Duplicate Event Days	Local User Interfaces
	Local User setting for configuration of a duplicate event - The days in which the event creation should be duplicated within the given recurring weekly schedule.	
	Type: Multiple Selections, Bitfield[0] Monday[1] Tuesday[2] Wednesday[3] Thursday[4] Friday[5] Saturday[6] Sunday	
LOCAL_UEx_DuplicateStartTime	Local User Setting - Event x - Duplicate Event Start Time	Local User Interfaces
	Local User setting for configuration of a duplicate event - The Start Time of the event. Event time must be entered in 24-hour (hhmm) format.	
	Units: Time in Format (HHMM)Min: 0000, Max: 2400	
LOCAL_UEx_DuplicateStopTime	Local User Setting - Event x - Duplicate Event Stop Time	Local User Interfaces
	Local User setting for configuration of a duplicate event - The Stop Time of the event. Event time must be entered in 24-hour (hhmm) format.	
	Units: Time in Format (HHMM)Min: 0000, Max: 2400	
LOCAL_UEx_Enabled	Local User Setting - Event x - Event Enabled	Local User Interfaces
	Local User setting for configuration of an event - Event Disabled or Enabled.	
	[0] Event Disabled (Default)[1] Event Enabled	
LOCAL_UEX_EnableMinimumImport	Local User Setting - Event X - Enable Minimum Import	Local User Interfaces
	Local User setting to enable the Peak Shaving Minimum Import threshold control operation in Event X of the Scheduled Operation Mode.	
	[0] Peak Shaving Minimum Import Disabled [1] Peak Shaving Minimum Import Enabled	
LOCAL_UEx_EnergyService	Local User Setting - Event x - Selected Energy Service	Local User Interfaces
	Local User setting for configuration of an event - Selected Energy Service for duration of Event.	
	[1] Idle Service (Default)[2] Peak Shaving Service[3] Target SoC Service[4] PQ Setpoint (Open Loop) Service[5] PQ Setpoint (Closed Loop) Service[6] Zero Power Service[7] Maintain SoC Service	
LOCAL_UEx_ExportLimit	Local User Setting - Event x - Export Limit	Local User Interfaces
	Local User setting for configuration of an event - The maximum allowable active power to be exported to the Grid from the Site as a result of BESS operation during the event.	
	Units: kWMin: 0, Max: SERVICE_SET_ExportLimitMaxDefault: LOCAL_COM_ExportLimit	
LOCAL_UEx_ImportLimit	Local User Setting - Event x - Import Limit	Local User Interfaces
	Local User setting for configuration of an event - The maximum allowable active power to be imported from the Grid to the Site as a result of BESS operation during the event.	
	Units: kWMin: 0, Max: SERVICE_SET_ImportLimitMaxDefault: LOCAL_COM_ImportLimit	

Table 19. xStorage 250-1000 Settings Parameters (Continued)

Parameter Name	Description	Access
LOCAL_UEx_MaxAbsorb	Local User Setting - Event x - Max Reactive Power Absorb Rate	Local User Interfaces
	Local User setting for configuration of an event - The maximum allowable reactive power absorption rate of the PCS duringthe event.	
	Units: kVarMin: 0, Max: SERVICE_SET_MaxAbsorbRtgDefault: LOCAL_COM_MaxAbsorb	
LOCAL_UEx_MaxCharge	Local User Setting - Event x - Max Active Power Charge Rate	Local User Interfaces
	Local User setting for configuration of an event - The maximum allowable active power charge rate of the PCS during the event.	
	Units: kWMin: 0, Max: SERVICE_SET_MaxChargeRtgDefault: LOCAL_COM_MaxCharge	
LOCAL_UEx_MaxDischarge	Local User Setting - Event x - Max Active Power Discharge Rate	Local User Interfaces
	Local User setting for configuration of an event - The maximum allowable active power discharge rate of the PCS during the event.	
	Units: kWMin: 0, Max: SERVICE_SET_MaxDischargeRtgDefault: LOCAL_COM_ MaxDischarge	
LOCAL_UEx_MaxInject	Local User Setting - Event x - Max Reactive Power Inject Rate	Local User Interfaces
	Local User setting for configuration of an event - The maximum allowable reactive power injection rate of the PCS during the event.	
	Units: kVarMin: 0, Max: SERVICE_SET_MaxInjectRtgDefault: LOCAL_COM_MaxInject	
LOCAL_UEx_Name	Local User Setting - Event x - Event Name	Local User Interfaces
	Local User setting for configuration of an event - Event Name.	
	Units: 32 ASCII Characters Max	
LOCAL_UEX_ PeakShavingMinimumImport	Local User Setting - Event X - Peak Shaving Target Demand	Local User Interfaces
	Local User defined lowest allowable grid import power threshold measured at the Site Meter that the controller will maintain during Peak Shaving Energy Service in Event X of the Scheduled Operation Mode. Becomes effective if the Enable Minimum Import parameter is set to True.	
	Units: kW, Min: 0, Max 65,535, Default: 0	
LOCAL_UEx_PeakShavingTarget	Local User Setting - Event x - Peak Shaving Target Demand	Local User Interfaces
	Local User setting for configuration of a Peak Shaving event - The target demand power to be delivered by the utility as measured at the Site Meter during the event.	
	Units: kWMin: 0, Max: 65,535Default: 0	
LOCAL_UEx_PQClosedLoop_P	Local User Setting - Event x - PQ Closed Loop P Setpoint	Local User Interfaces
	Local User setting for configuration of a PQ Closed Loop event - The active power setpoint to be observed at the BESS Meter during the event. A positive command implies discharging. A negative command implies charging.	
	Units: kWMin: -3,276.8, Max: 3,276.7Default: 0	

Table 19. xStorage 250-1000 Settings Parameters (Continued)

Parameter Name	Description	Access
LOCAL_UEx_PQClosedLoop_Q	Local User Setting - Event x - PQ Closed Loop Q Setpoint	Local User Interfaces
	Local User setting for configuration of a PQ Closed Loop event - The reactive power setpoint to be observed at the BESS Meter for the event. A positive command implies absorbing. A negative command implies injecting.	
	Units: kVarMin: -3,276.8, Max: 3,276.7Default: 0	
LOCAL_UEx_PQOpenLoop_P	Local User Setting - Event x - PQ Open Loop P Setpoint	Local User Interfaces
	Local User setting for configuration of a PQ Open Loop event - The active power setpoint to be commanded directly to the PCS duirng the event. A positive command implies discharging. A negative command implies charging.	
	Units: kWMin: -3,276.8, Max: 3,276.7Default: 0	
LOCAL_UEx_PQOpenLoop_Q	Local User Setting - Event x - PQ Open Loop Q Setpoint	Local User Interfaces
	Local User setting for configuration of a PQ Open Loop event - The reactive power setpoint to be commanded directly to the PCS during the event. A positive command implies absorbing. A negative command implies injecting.	
	Units: kVarMin: -3,276.8, Max: 3,276.7Default: 0	
LOCAL_UEx_SingleOrDuplicate	Local User Setting - Event x - Single Or Duplicate Configuration	Local User Interfaces
	Local User setting for configuration of an event - Selection of whether this set of parameters applies to a single event or duplicate event configuration.	
	[0] Single Event Configuration (Default)[1] Duplicate Event Configuration	
LOCAL_UEx_SingleStartDay	Local User Setting - Event x - Single Event Start Day	Local User Interfaces
	Local User setting for configuration of a single event - The selected Start Day for the event to end on. Recurs weekly.	
	[0] Monday[1] Tuesday[2] Wednesday[3] Thursday[4] Friday[5] Saturday[6] Sunday	
LOCAL_UEx_SingleStartTime	Local User Setting - Event x - Single Event Start Time	Local User Interfaces
	Local User setting for configuration of a single event - The Start Time of the event. Event time must be entered in 24-hour (hhmm) format.	
	Units: Time in Format (HHMM)Min: 0000, Max: 2400	
LOCAL_UEx_SingleStopDay	Local User Setting - Event x - Single Event Stop Day	Local User Interfaces
	Local User setting for configuration of a single event - The selected Stop Day for the event to end on. Recurs weekly.	
	[0] Monday[1] Tuesday[2] Wednesday[3] Thursday[4] Friday[5] Saturday[6] Sunday	
LOCAL_UEx_SingleStopTime	Local User Setting - Event x - Single Event Stop Time	Local User Interfaces
	Local User setting for configuration of a single event - The Stop Time of the event. Event time must be entered in 24-hour (hhmm) format.	
	Units: Time in Format (HHMM)Min: 0000, Max: 2400	

Table 19. xStorage 250-1000 Settings Parameters (Continued)

Parameter Name	Description	Access
LOCAL_UEx_TargetSoC	Local User Setting - Event x - Target SoC Setpoint	Local User Interfaces
	Local User setting for configuration of a Target SoC event - The target State of Charge for the batteries to charge or discharge to while during the event.	
	Units: %Min: LOCAL_SET_MinReservedSoC, Max: LOCAL_SET_MaxReservedSoCDefault: LOCAL_SET_MaxReservedSoC	
REMOTE_SET_ ApparentPowerPriority	Remote User Setting - Apparent Power Priority	Remote User Interfaces
	Remote User defined priority setting that establishes how to resolve conflicts between real and reactive power commands.	
	[1] Active Power Priority (Default)[2] Reactive Power Priority[3] Power Angle Priority	
REMOTE_SET_ DisableSitePowerLimiting	Remote User Setting - Disable Site Power Limiting	Remote User Interfaces
	Remote User setting to disable Site Power limiting during operation. Site Power limits (import and export) are enabled by default.	
	[0] Site Power Limiting Enabled (Default)[1] Site Power Limiting Disabled	
REMOTE_SET_EnableCurrentLimit	Remote Setting - PCS Limit - Enable Current Limitation	Remote User Interfaces
	Remote User setting to enable or disable PCS current limitation, based on current operating conditions.	
	[0] Current Limitation Disabled [1] Current Limitation Enabled	
REMOTE_SET_ExportLimit	Remote User Setting - Export Limit	Remote User Interfaces
	Remote User defined maximum allowable active power to be exported to the Grid from the Site as a result of BESS operation during Remote User Mode.	
	Units: kWMin: 0, Max: SERVICE_SET_ExportLimitMaxDefault: SERVICE_SET_ ExportLimitMax	
REMOTE_SET_FormingRef_Freq	Remote User Setting - Frequency Reference while in Grid Forming	Remote User Interfaces
	Remote User defined frequency reference during Grid-Forming operation.	
	Units: HzMin: 0.9*SERVICE_SET_NomACFrequencyRtgMax: 1.1*SERVICE_SET_ NomACFrequencyRtgDefault: SERVICE_SET_NomACFrequencyRtg	
REMOTE_SET_FormingRef_Volt	Remote User Setting - Voltage Reference while in Grid Forming	Remote User Interfaces
	Remote User defined voltage reference during Grid-Forming operation.	
	Units: VMin: 0.9*SERVICE_SET_NomACVoltageRtgMax: 1.1*SERVICE_SET_ NomACVoltageRtgDefault: SERVICE_SET_NomACVoltageRtg	
REMOTE_SET_IdMax	Remote Setting - PCS Limit - Real Current Positive Limit	Remote User Interfaces
	Real positive current limit for the PCS based on current operating conditions.	
	Units: A, Min: 0, Max: 1250, Default: 1250	

Table 19. xStorage 250-1000 Settings Parameters (Continued)

Parameter Name	Description	Access
REMOTE_SET_IdMin	Remote Setting - PCS Limit - Real Current Negative Limit	Remote User Interfaces
	Real negative current limit for the PCS based on current operating conditions.	
	Units: A, Min: -1250, Max: 0, Default: -1250	
REMOTE_SET_IqMax	Remote Setting - PCS Limit - Reactive Current Positive Limit	Remote User Interfaces
	Reactive positive current limit for the PCS based on current operating conditions.	
	Units: A, Min: 0, Max: 1250, Default: 1250	
REMOTE_SET_IqMin	Remote Setting - PCS Limit - Reactive Current Negative Limit	Remote User Interfaces
	Reactive negative current limit for the PCS based on current operating conditions.	
	Units: A, Min: -1250, Max: 0, Default: -1250	
REMOTE_SET_ImportLimit	Remote User Setting - Import Limit	Remote User Interfaces
	Remote User defined maximum allowable active power to be imported from the Grid to the Site as a result of BESS operation during Remote User Mode.	
	Units: kWMin: 0, Max: SERVICE_SET_ImportLimitMaxDefault: SERVICE_SET_ ImportLimitMax	
REMOTE_SET_LocalRemoteMode	Remote User Setting - Local or Remote User Mode	Remote User Interfaces
	Remote User setting to request the system to change between Local and Remote User Mode.	
	[0] Local User Mode Selected (Default)[1] Remote user Mode Selected	
REMOTE_SET_MaxAbsorb	Remote User Setting - Max Reactive Power Absorb Rate	Remote User Interfaces
	Remote User defined maximum allowable reactive power absorption rate of the PCS during operation of Energy Services.	
	Units: kVarMin: 0, Max: SERVICE_SET_MaxAbsorbRtgDefault: SERVICE_SET_ MaxAbsorbRtg	
REMOTE_SET_MaxCharge	Remote User Setting - Max Active Power Charge Rate	Remote User Interfaces
	Remote User defined maximum allowable active power charge rate of the PCS during operation of Energy Services.	
	Units: kWMin: 0, Max: SERVICE_SET_MaxChargeRtgDefault: SERVICE_SET_MaxChargeRtg	
REMOTE_SET_MaxDischarge	Remote User Setting - Max Active Power Discharge Rate	Remote User Interfaces
	Remote User defined maximum allowable active power discharge rate of the PCS during operation of Energy Services.	
	Units: kWMin: 0, Max: SERVICE_SET_MaxDischargeRtgDefault: SERVICE_SET_ MaxDischargeRtg	

Table 19. xStorage 250-1000 Settings Parameters (Continued)

Parameter Name	Description	Access
REMOTE_SET_MaxInject	Remote User Setting - Max Reactive Power Inject Rate	Remote User Interfaces
	Remote User defined maximum allowable reactive power injection rate of the PCS during operation of Energy Servcies.	
	Units: kVarMin: 0, Max: SERVICE_SET_MaxInjectRtgDefault: SERVICE_SET_MaxInjectRtg	
REMOTE_SET_MaxReservedSoC	Remote User Setting - Max Reserved SoC	Remote User Interfaces
	Remote User defined maximum battery State of Charge allowed during the operation of Energy Services. Energy Services will be limited when this boundary is reached.	
	Units: %Min: SERVICE_SET_MinSoCRtg, Max: SERVICE_SET_MaxSoCRtgDefault: SERVICE_SET_MaxSoCRtg	
REMOTE_SET_MinReservedSoC	Remote User Setting - Min Reserved SoC	Remote User Interfaces
	Remote User defined minimum battery State of Charge allowed during the operation of Energy Services. Energy Services will be limited when this boundary is reached.	
	Units: %Min: SERVICE_SET_MinSoCRtg, Max: SERVICE_SET_MaxSoCRtgDefault: SERVICE_SET_MinSoCRtg	
REMOTE_SET_PowerSetpoint_P	Remote User Setting - Active Power Setpoint P	Remote User Interfaces
	Remote User defined active power setpoint used in the selected Energy Service. A positive command implies discharging. A negative command implies charging.	
	Units: kWMin: -3,276.8, Max: 3,276.7Default: 0	
REMOTE_SET_PowerSetpoint_Q	Remote User Setting - Reactive Power Setpoint Q	Remote User Interfaces
	Remote User defined reactive power setpoint used in the selected Energy Service. A positive command implies absorbing. A negative command implies injecting.	
	Units: kVarMin: -3,276.8, Max: 3,276.7Default: 0	
REMOTE_SET_PowerSetpointType	Remote User Setting - Power Setpoint Type	Remote User Interfaces
	Remote User selection of whether power setpoints are to be interpretted as Open Loop at the PCS or Closed Loop around the BESS Meter location.	
	[0] Closed Loop Power Setpoint (Default)[1] Open Loop Power Setpoint	
SERVICE_SET_BattCapacityRtg	Service Setting - Nameplate Energy Capacity Rating	Eaton Service
SERVICE_SET_ExportLimitMax	Service Setting - Max Export Limit	Eaton Service
SERVICE_SET_ImportLimitMax	Service Setting - Max Import Limit	Eaton Service
SERVICE_SET_MaxAbsorbRtg	Service Setting - Max Reactive Power Absorb Rating	Eaton Service
SERVICE_SET_MaxACCurrentRtg	Service Setting - Max AC Current Rating	Eaton Service
SERVICE_SET_MaxApparentRtg	Service Setting - Max Apparent Power Rating	Eaton Service
SERVICE_SET_MaxChargeRtg	Service Setting - Max Active Power Charge Rating	Eaton Service

Table 19. xStorage 250-1000 Settings Parameters (Continued)

Parameter Name	Description	Access
SERVICE_SET_MaxDischargeRtg	Service Setting - Max Active Power Discharge Rating	Eaton Service
SERVICE_SET_MaxInjectRtg	Service Setting - Max Reactive Power Inject Rating	Eaton Service
SERVICE_SET_MaxSoCRtg	Service Setting - Nameplate Battery Max SoC	Eaton Service
SERVICE_SET_MinSoCRtg	Service Setting - Nameplate Battery Min SoC	Eaton Service
SERVICE_SET_NomACFrequencyRtg	Service Setting - Nominal AC Frequency Rating	Eaton Service
SERVICE_SET_NomACVoltageRtg	Service Setting - Nominal AC Voltage Rating	Eaton Service

6.1.2 Controls

Table 20. xStorage 250-1000 Controls Parameters

Parameter Name	Description	Access
CMD_BESSStateCmd	BESS State Command	Local User InterfacesRemote User Interfaces
	BESS State machine user commands.	
	[0] No State Command[1] Goto Offline[2] Goto DC Connected [3] Goto Following[4] Goto Forming	
CMD_ClearFaultWarningCmd	Clear Faults and Warnings Command	Local User InterfacesRemote User Interfaces
	Fault and/or warning clear commands.	
	[0] No Clear Command[1] Clear PCS Warning[2] Clear PCS Fault[3] Clear Battery Warning{4] Clear Battery Fault[5] Clear General System Warning[6] Clear General System Fault[7] Clear All BESS Warning[8] Clear All BESS Fault[9] Clear All Faults and Warnings	
CMD_RemoteVoltageSyncCmd	Synchronize BESS to Remote Voltage Command	Remote User Interfaces
	Command to synchronize to remote/grid voltage. For use in Manual Grid-Forming Control configurations.	
	[0] No Sync Command[1] Synchronize to Remote Voltage	

6.1.3 Monitoring

Table 21. xStorage 250-1000 Monitoring Parameters

Parameter Name	Description	Access
BATT_AvgCellVoltage	Battery Measurement - Average Cell Voltage	All Interfaces
	Average cell voltage for all cells in the battery bank.	
	Units: V	
BATT_ChargeEnergyAvailable	Battery Measurement - Charge Energy Available	All Interfaces
	Available charge energy until reaching the maximum reserved SoC limit.	
	Units: kWh	
BATT_DCCurrent	Battery Measurement - DC Current	All Interfaces
	Total DC current flowing to/from the battery bank. Positive current implies discharging. Negative current implies charging.	
	Units: A	
BATT_DCPower	Battery Measurement - DC Power	All Interfaces
	Total DC power flowing to/from the battery bank. Positive power implies discharging. Negative power implies charging.	
	Units: V	
BATT_DCVoltage	Battery Measurement - DC Voltage	All Interfaces
	Battery DC bus voltage.	
	Units: V	
BATT_DischargeEnergyAvailable	Battery Measurement - Discharge Energy Available	All Interfaces
	Available discharge energy until reaching the minimum reserved SoC limit.	
	Units: kWh	
BATT_MaxCellVoltage	Battery Measurement - Max Cell Voltage	All Interfaces
	Maximum cell voltage for all cells in the bank.	
	Units: V	
BATT_MaxChargePowerAllowed	Battery Measurement - Max Charge Power Allowed	All Interfaces
	Maximum allowable charge power limit for the battery bank based on current operating conditions.	
	Units: kW	
BATT_MaxDischargePowerAllowed	Battery Measurement - Max Discharge Power Allowed	All Interfaces
	Maximum allowable discharge power limit for the battery bank based on current operating conditions.	

Table 21. xStorage 250-1000 Monitoring Parameters (Continued)

Parameter Name	Description	Access
	Units: kW	
BATT_MinCellVoltage	Battery Measurement - Min Cell Voltage	All Interfaces
	Minimum cell voltage for all cells in the bank.	
	Units: V	
BATT_SoC	Battery Measurement - State of Charge	All Interfaces
	Battery state of charge, expressed as a percentage.	
	Units: %	
BATT_SoH	Battery Measurement - State of Health	All Interfaces
	Percentage of battery life remaining.	
	Units: %	
BESS_ACCurrent	BESS Meter Measurement - AC Current	All Interfaces
	Total AC current, measured at the BESS Meter. Positive current implies discharging. Negative current implies charging.	
	Units: A	
BESS_ActiveEnergyCharged	BESS Meter Measurement - Total Active Energy Charged	All Interfaces
	Total active energy charged by the BESS from the Site, measured at the BESS Meter.	
	Units: kWh	
BESS_ActiveEnergyDischarged	BESS Meter Measurement - Total Active Energy Discharged	All Interfaces
	Total active energy discharged by the BESS to the Site, measured at the BESS Meter.	
	Units: kWh	
BESS_ActivePower	BESS Meter Measurement - Active Power	All Interfaces
	Total active power, measured at the BESS Meter. Positive active power implies discharging. Negative active power implies charging.	
	Units: kW	
BESS_ACVoltage_LL	BESS Meter Measurement - AC Voltage Line-to-Line	All Interfaces
	Line to line AC voltage as an average of active phases, measured at the BESS Meter.	
	Units: V	
BESS_ACVoltage_LN	BESS Meter Measurement - AC Voltage Line-to-Neutral	All Interfaces
	Line to neutral AC voltage as an average of active phases, measured at the BESS Meter.	

Table 21. xStorage 250-1000 Monitoring Parameters (Continued)

Parameter Name	Description	Access
	Units: V	
BESS_ApparentPower	BESS Meter Measurement - Apparent Power	All Interfaces
	Total apparent power, measured at the BESS Meter.	
	Units: kVA	
BESS_Frequency	BESS Meter Measurement - Frequency	All Interfaces
	AC frequency, measured at the BESS Meter.	
	Units: Hz	
BESS_PowerFactor	BESS Meter Measurement - Power Factor	All Interfaces
	Power factor, measured at the BESS Meter. A positive power factor implies lagging. A negative power factor implies leading.	
BESS_ReactiveEnergyAbsorbed	BESS Meter Measurement - Total Reactive Energy Absorbed	All Interfaces
	Total reactive energy absorbed by the BESS, measured at the BESS Meter.	
	Units: kVarh	
BESS_ReactiveEnergyInjected	BESS Meter Measurement - Total Reactive Energy Injected	All Interfaces
	Total reactive energy injected from the BESS, measured at the BESS Meter.	
	Units: kVarh	
BESS_ReactivePower	BESS Meter Measurement - Reactive Power	All Interfaces
	Total reactive power, measured at the BESS Meter. A positive reactive power implies the BESS is primarily inductive. A negative reactive power implies the BESS is primarily capacitive.	
	Units: kVarh	
LOAD_ACCurrent	Load Calculation - AC Current	All Interfaces
	Total AC current, calculated for the net Load. Positive current implies consuming. Negative current implies supplying.	
	Units: A	
LOAD_ActiveEnergyConsumed	Load Calculation - Total Active Energy Consumed	All Interfaces
	Total active energy consumed by the Load from the Site, calculated for the net Load.	
	Units: kWh	
LOAD_ActiveEnergySupplied	Load Calculation - Total Active Energy Supplied	All Interfaces
	Total active energy supplied by the Load to the Site, calculated for the net Load.	

Table 21. xStorage 250-1000 Monitoring Parameters (Continued)

Parameter Name	Description	Access
	Units: kWh	
LOAD_ActivePower	Load Calculation - Active Power	All Interfaces
	Total active power, calculated for the net Load. Positive active power implies consuming. Negative active power implies supplying.	
	Units: kW	
LOAD_ACVoltage_LL	Load Calculation - AC Voltage Line-to-Line	All Interfaces
	Line to line AC voltage as an average of active phases, calculated for the net Load.	
	Units: V	
LOAD_ACVoltage_LN	Load Calculation - AC Voltage Line-to-Neutral	All Interfaces
	Line to neutral AC voltage as an average of active phases, calculated for the net Load.	
	Units: V	
LOAD_ApparentPower	Load Calculation - Apparent Power	All Interfaces
	Total apparent power, calculated for the net Load.	
	Units: kVA	
LOAD_Frequency	Load Calculation - Frequency	All Interfaces
	AC frequency, calculated for the net Load.	
	Units: Hz	
LOAD_PowerFactor	Load Calculation - Power Factor	All Interfaces
	Power factor, calculated for the net Load. A positive power factor implies lagging. A negative power factor implies leading.	
LOAD_ReactiveEnergyAbsorbed	Load Calculation - Total Reactive Energy Absorbed	All Interfaces
	Total reactive energy absorbed by the Load, calculated for the net Load.	
	Units: kVarh	
LOAD_ReactiveEnergyInjected	Load Calculation - Total Reactive Energy Injected	All Interfaces
	Total reactive energy injected from the Load, calculated for the net Load.	
	Units: kVarh	
LOAD_ReactivePower	Load Calculation - Reactive Power	All Interfaces
	Total reactive power, calculated for the net Load. A positive reactive power implies the Load is primarily inductive. A negative reactive power implies the Load is primarily capacitive.	

Table 21. xStorage 250-1000 Monitoring Parameters (Continued)

Parameter Name	Description	Access
	Units: kVar	
PCS_MaxAbsorbPowerAllowed	PCS Measurement - Max Reactive Power Absorb Rate Allowed	All Interfaces
	Maximum allowable reactive power absorb rate limit for the PCS based on current operating conditions.	
	Units: kVar	
PCS_MaxChargePowerAllowed	PCS Measurement - Max Active Power Charge Rate Allowed	All Interfaces
	Maximum allowable active power charge rate limit for the PCS based on current operating conditions.	
	Units: kW	
PCS_MaxDischargePowerAllowed	PCS Measurement - Max Active Power Discharge Rate Allowed	All Interfaces
	Maximum allowable active power discharge rate limit for the PCS based on current operating conditions.	
	Units: kW	
PCS_MaxInjectPowerAllowed	PCS Measurement - Max Reactive Power Inject Rate Allowed	All Interfaces
	Maximum allowable reactive power inject rate limit for the PCS based on current operating conditions.	
	Units: kVar	
SITE_ACCurrent	Site Meter Measurement - AC Current	All Interfaces
	Total AC current, measured at the Site Meter. Positive current implies importing. Negative current implies exporting.	
	Units: A	
SBMUX_SOH	SBMUX - State of Health	All Interfaces
	Indicates the overall health of the battery cabinet, as a percentage of its original capacity.	
	Units: %	
SBMUX_MaxChgCurrAllowed	SBMUX - Maximum Allowed Charging Current	All Interfaces
	The highest current the battery cabinet can safely accept during charging under current conditions.	
	Units: A	
SBMUX_MaxDischgCurrAllowed	SBMUX - Maximum Allowed Discharging Current	All Interfaces
	The highest current the battery cabinet can safely deliver during discharge.	
	Units: A	
SBMUX_MaxDischgCurrAllowed	SBMUX - Max charge power allowed	All Interfaces

Table 21. xStorage 250-1000 Monitoring Parameters (Continued)

Parameter Name	Description	Access
	Maximum charging power (in watts) permitted based on battery cabinet limits and conditions.	
	Units: kW	
SBMUX_MaxDischgPwrAllowed	SBMUX - Max discharge power allowed	All Interfaces
	Maximum discharging power (in watts) permitted under safe operating limits.	
	Units: kW	
SBMUX_MaxCellSelfDischgRate	SBMUX - Max Cell Self_Discharging rate	All Interfaces
	The highest observed self-discharge rate of any individual cell.	
	Units: %	
SBMUX_MinCellSelfDischgRate	SBMUX - Min Cell Self_Discharging rate	All Interfaces
	The lowest observed self-discharge rate among all cells.	
	Units: %	
SBMUX_AveCellSelfDischgRate	SBMUX - Average Cell Self_Discharging rate	All Interfaces
	The average rate at which cells lose charge naturally without load or charging.	
	Units: %	
SBMUX_HistAccChgEnergy	SBMUX - Historical Accumulated Charging Energy	All Interfaces
	Total energy (kWh) delivered to the battery cabinet during all charging cycles.	
	Units: kWh	
SBMUX_HistAccDischgEnergy	SBMUX - Historical Accumulated Discharging Energy	All Interfaces
	Total energy (kWh) drawn from the battery cabinet during all discharging cycles.	
	Units: kWh	
SBMUX_HistAccChgCapacity	SBMUX - Historical Accumulated Charging Capacity	All Interfaces
	Total ampere-hours (Ah) charged into the battery cabinet over its lifetime.	
	Units: Ah	
SBMUX_HistAccDischgCapacity	SBMUX - Historical Accumulated Discharging Capacity	All Interfaces
	Total ampere-hours (Ah) discharged from the battery cabinet over its lifetime.	
	Units: Ah	

Table 21. xStorage 250-1000 Monitoring Parameters (Continued)

Parameter Name	Description	Access
SBMUX_HistAccCycleTimes	SBMUX - Historical Cumulative Charge and Discharge Cycle Times	All Interfaces
	Total number of complete charge/discharge cycles.	
SBMUX_AccNumOVFaults	SBMUX - Cumulative Numer of Limit Overvoltage Faults	All Interfaces
	Count of faults triggered by voltage exceeding the upper safety limit.	
SBMUX_AccNumUVFaults	SBMUX - Cumulative Numer of Limit Undervoltage Faults	All Interfaces
	Count of faults triggered when voltage drops below the lower safety threshold.	
SBMUX_AccNumChgOCFaults	SBMUX - Cumulative Number of Charging Overcurrent Faults	All Interfaces
	Number of times charging current exceeded the safe limit.	
SBMUX_AccNumDischgOCFaults	SBMUX - Cumulative Number of Discharging Overcurrent Faults	All Interfaces
	Number of times discharging current exceeded the safe limit.	
SBMUX_AccNumHighTempFaults	SBMUX - Cumulative Number of Cell High Temperaure Faults	All Interfaces
	Total occurrences of any cell exceeding its maximum temperature limit.	
SBMUX_AccChgTimeLowTemp	SBMUX - Cumulative Charging Time at Low Temperature	All Interfaces
	Total time spent charging below the recommended temperature range.	
	Units: sec	
SBMUX_AccTimeLowTemp	SBMUX - Accumulation Time at Low Temperature	All Interfaces
	Total time the battery cabinet remained below its recommended operating temperature.	
	Units: sec	
SBMUX_AccTimeHighTemp	SBMUX - Accumulation Time at High Temperature	All Interfaces
	Total time the battery cabinet remained above its recommended operating temperature.	
	Units: sec	
SBMUX_AccChgTimeHighTemp	SBMUX - Cumulative Charging Time at High Temperature	All Interfaces
	Total time spent charging above the safe temperature range.	
	Units: sec	
SBMUX_AccDischgTimeHighTemp	SBMUX - Cumulative Discharging Time at High Temperature	All Interfaces
	Total time spent discharging above the safe temperature range.	
	Units: sec	

Table 21. xStorage 250-1000 Monitoring Parameters (Continued)

Parameter Name	Description	Access
SBMUX_BattProdYear	SBMUX - Battery production year	All Interfaces
	Year the battery cabinet was manufactured.	
SBMUX_BattProdWeek	SBMUX - Battery production week	All Interfaces
	Week number within the production year when the battery cabinet was manufactured.	
SBMUX_BattProdDay	SBMUX - Battery production day of the week	All Interfaces
	Specific day of the week when the battery cabinet was produced.	
SITE_ActiveEnergyExported	Site Meter Measurement - Total Active Energy Exported	All Interfaces
	Total active energy exported by the Site to the Grid, measured at the Site Meter.	
	Units: kWh	
SITE_ActiveEnergyImported	Site Meter Measurement - Total Active Energy Imported	All Interfaces
	Total active energy imported by the Site from the Grid, measured at the Site Meter.	
	Units: kWh	
SITE_ActivePower	Site Meter Measurement - Active Power	All Interfaces
	Total active power, measured at the Site Meter. Positive active power implies importing. Negative active power implies exporting.	
	Units: kW	
SITE_ACVoltage_LL	Site Meter Measurement - AC Voltage Line-to-Line	All Interfaces
	Line to line AC voltage as an average of active phases, measured at the Site Meter.	
	Units: V	
SITE_ACVoltage_LN	Site Meter Measurement - AC Voltage Line-to-Neutral	All Interfaces
	Line to neutral AC voltage as an average of active phases, measured at the Site Meter.	
	Units: V	
SITE_ApparentPower	Site Meter Measurement - Apparent Power	All Interfaces
	Total apparent power, measured at the Site Meter.	
	Units: kVA	
SITE_Frequency	Site Meter Measurement - Frequency	All Interfaces
	AC frequency, measured at the Site Meter.	
	Units: Hz	

Table 21. xStorage 250-1000 Monitoring Parameters (Continued)

Parameter Name	Description	Access
SITE_PowerFactor	Site Meter Measurement - Power Factor	All Interfaces
	Power factor, measured at the Site Meter. A positive power factor implies lagging. A negative power factor implies leading.	
SITE_ReactiveEnergyAbsorbed	Site Meter Measurement - Total Reactive Energy Absorbed	All Interfaces
	Total reactive energy absorbed by the Site, measured at the Site Meter.	
	Units: kVarh	
SITE_ReactiveEnergyInjected	Site Meter Measurement - Total Reactive Energy Injected	All Interfaces
	Total reactive energy injected from the Site, measured at the Site Meter.	
	Units: kVarh	
SITE_ReactivePower	Site Meter Measurement - Reactive Power	All Interfaces
	Total reactive power, measured at the Site Meter. A positive reactive power implies the Site is primarily inductive. A negative reactive power implies the Site is primarily capacitive.	
	Units: kVar	
STATE_ActivePowerLimiterStatus	State Monitoring - Active Power Limiter Status	All Interfaces
	Status of the Active Power Limiter function.	
	[0] Active Power Within Limits[1] Maximum Charge Power Limit Reached[2] Maximum Discharge Power Limit Reached	
STATE_ActiveSchedulerEvent	State Monitoring - Active Scheduler Event	All Interfaces
	Active user defined event in Scheduled Operation Mode.	
	[0] No Event Active[1] Local User Event 1[2] Local User Event 2[3] Local User Event 3[4] Local User Event 4[5] Local User Event 5[6] Local User Event 6[7] Local User Event 7[8] Local User Event 8[9] Local User Event 9[10] Local User Event 10	
STATE_ApparentPowerPriorityStatus	State Monitoring - Apparent Power Priority Status	All Interfaces
	Status of the Apparent Power Priority Limiter function.	
	[0] Power Priority Limiter Inactive[1] Active Power Prioritized[2] Reactive Power Prioritized[3] Power Angle Prioritized	
STATE_BATTState	State Monitoring - Battery State	All Interfaces
	Vendor defined operating state of the Battery system	
	[0] Battery State Unknown[1] Battery Fault[2] Battery Disconnected[3] Battery Connected[4] Battery Clearing Fault[5] Battery Disconnecting[6] Battery Connecting	
STATE_BESSState	State Monitoring - BESS State	All Interfaces

Table 21. xStorage 250-1000 Monitoring Parameters (Continued)

Parameter Name	Description	Access
	Vendor defined operating state of the BESS.	
	[0] BESS State Unknown [1] BESS Fault [2] BESS Offline [3] BESSDC Connected [4] BESS Grid Following [5] BESS Grid Forming [6}BESS Clearing PCS Fault [7] BESS Clearing Battery Fault [8] BESSClearing System Fault [9] BESS Disconnecting Battery [10] BESSConnecting Battery [11] BESS Stopping PCS [12} BESS Starting inFollowing [13] BESS Starting in Forming [14] BESS Transitioning toFollowing [15] BESS Transitioning to Forming [16] BESS Ridethru [17] BESS Cessation	
STATE_EnergyService	State Monitoring - Active Energy Service	All Interfaces
	Active Energy Service for the BESS.	
	[0] Energy Services Disabled[1] Idle Service[2] Peak Shaving Service[3] Target SoC Service[4] PQ Setpoint (Open Loop) Service [5] PQ Setpoint (Closed Loop) Service[6] Zero Power Service[7] Maintain SoC Service	
STATE_InternalCommand_P	State Monitoring - Internal Active Power Command	All Interfaces
	Limited active power reference that is commanded to the PCS stage of the BESS. May differ from user P setpoint. A positive command implies discharging. A negative command implies charging.	
	Units: kW	
STATE_InternalCommand_Q	State Monitoring - Internal Reactive Power Command	All Interfaces
	Limited reactive power reference that is commanded to the PCS stage of the BESS. May differ from user Q setpoint. A positive command implies absorbing. A negative command implies injecting.	
	Units: kVar	
STATE_InternalLimitAbsorb	State Monitoring - Internal Reactive Power Absorb Limit	All Interfaces
	Internal reactive power absorb limit that is determined from the minimum of User and PCS limits based on current operating conditions.	
	Units: kVar	

Table 21. xStorage 250-1000 Monitoring Parameters (Continued)

Parameter Name	Description	Access
STATE_InternalLimitCharge	State Monitoring - Internal Active Power Charge Limit	All Interfaces
	Internal active power charge limit that is determined from the minimum of User, Battery, and PCS limits based on current operating conditions.	
	Units: kW	
STATE_InternalLimitDischarge	State Monitoring - Internal Reactive Power Discharge Limit	All Interfaces
	Internal active power discharge limit that is determined from the minimum of User, Battery, and PCS limits based on current operating conditions.	
	Units: kW	
STATE_InternalLimitInject	State Monitoring - Internal Reactive Power Inject Limit	All Interfaces
	Internal reactive power inject limit that is determined from the minimum of User and PCS limits based on current operating conditions.	
	Units: kVar	
STATE_OperationMode	State Monitoring - Active Operation Mode	All Interfaces
	Active Operation Mode for the BESS.	
	[0] Constant Operation Mode[1] Scheduled Operation Mode	
STATE_PCSState	State Monitoring - PCS State	All Interfaces
	Vendor defined operating state of the Power Conversion System / Inverter.	
	[0] PCS State Unknown [1] PCS Fault [2] PCS Stopped [3] PCSRunning Following [4] PCS Running Forming [5] PCS Clearing Fault [6] PCS Stopping [7] PCS Starting in Following [8] PCS Starting inForming [9] PCS Transitioning to Following [10] PCS Transitioningto Forming [11] PCS Bypass [12] PCS Ridethru [13] PCS Cessation	
STATE_ReactivePowerLimiterStatus	State Monitoring - Reactive Power Limiter Status	All Interfaces
	Status of the Reactive Power Limiter function.	
	[0] Reactive Power Within Limits [1] Maximum Absorbed Power Limit Reached	

Table 21. xStorage 250-1000 Monitoring Parameters (Continued)

Parameter Name	Description	Access
STATE_RemoteVoltageSyncStatus	[2] Maximum Injected Power Limit Reached	
	State Monitoring - Remote Voltage Sync Status	All Interfaces
	Status of synchronization to remote/grid voltage. For microgrid controller use only.	
	[0] Not Synchronized to Remote Voltage[1] Synchronized to Remote Voltage	
STATE_SitePowerLimiterStatus	State Monitoring - Site Power Limiter Status	All Interfaces
	Status of the Site Power Limiter function.	
	[0] Site Power Limiter Inactive [1] Import Limiter Active [2] Export Limiter Active	
STATE_SoCLimiterStatus	State Monitoring - SoC Limiter Status	All Interfaces
	Status of the State of Charge Limiter function.	
	[0] SoC Limiter Inactive[1] Minimum SoC Level 1 Limiter Active[2] Minimum SoC Level 2 Limiter Active[3] Maximum SoC Level 1 Limiter Active[4] Maximum SoC Level 2 Limiter Active	
STATE_UserMode	State Monitoring - Active User Mode	All Interfaces
	Active User Mode for the BESS. Source of active settings and controls inputs.	
	[0] Local User Mode[1] Remote User Mode[2] Local User Mode (Autonomous)[3] Remote User Mode (Autonomous)	

6.1.4 Alarms

Table 22. xStorage 250-1000 Alarm Parameters

Parameter Name	Description	Access
ALARM_BESS_SummaryAlarm	BESS Alarm - Summary Alarm	All Interfaces
	Summary BESS Critical Fault, Fault, and Warning Status Parameter	
	Type: Bitfield[0] PCS Warning Active[1] PCS Fault Active[2] Battery Warning Active[3] Battery Fault Active[4] GPIO Warning Active[5] GPIO Fault Active[6] BESS Warning Active[7] BESS Fault Active[9] System Critical Fault Active	
ALARM_BATT_AlarmCode	BATT Alarm Code Dedicated Array	All Interfaces
	Parameter array dedicated for vendor specific BATT alarm codes	
	Modbus: 32 registers dedicated to Battery Alarm CodesWebApps: Timeline provides Battery Alarm Code details	
ALARM_BESS_AlarmCode	BESS Alarm Code Dedicated Array	All Interfaces
	Parameter array dedicated for vendor specific BESS alarm codes.	
	Modbus: 2 registers dedicated to BESS Alarm CodesWebApps: Timeline provides BESS Alarm Code details	
ALARM_GPIO_AlarmCode	GPIO Alarm Code Dedicated Array	All Interfaces
	Parameter array dedicated for vendor specific GPIO alarm codes.	
	Modbus: 2 registers dedicated to GPIO Alarm CodesWebApps: Timeline provides GPIO Alarm Code details	
ALARM_PCS_AlarmCode	PCS Alarm Code Dedicated Array	All Interfaces
	Parameter array dedicated for vendor specific PCS alarm codes	
	Modbus: 16 registers dedicated to PCS Alarm CodesWebApps: Timeline provides PCS Alarm Code details	

6.1.5 Other Parameters

Table 23. xStorage 250-1000 Other Parameters

Parameter Name	Description	Access
HB_BESSHeartbeat	BESS Heartbeat	Remote User Interfaces
	Value is incremented every second by the BESS with periodic resets to zero.	
	Min: 0, Max: 255	

Table 23. xStorage 250-1000 Other Parameters (Continued)

Parameter Name	Description	Access
HB_NothboundHeartbeat	Northbound Controller Heartbeat	Remote User Interfaces
	Value is incremented every second by the Northbound Controller with periodic resets to zero.	
	Min: 0, Max: 255	

6.2 Connecting to the User Interfaces

In 5.4.3 *User Modes*, User Modes were introduced to define "WHO" is controlling the BESS operation. Various user interfaces were defined that were associated with Local User Mode and Remote User Mode. Refer to 5.4.3 *User Modes* for detailed descriptions of each user mode.

Figure 58 depicts how each interface is physically accessed by the user.

Figure 58. Physical Access to User Interfaces

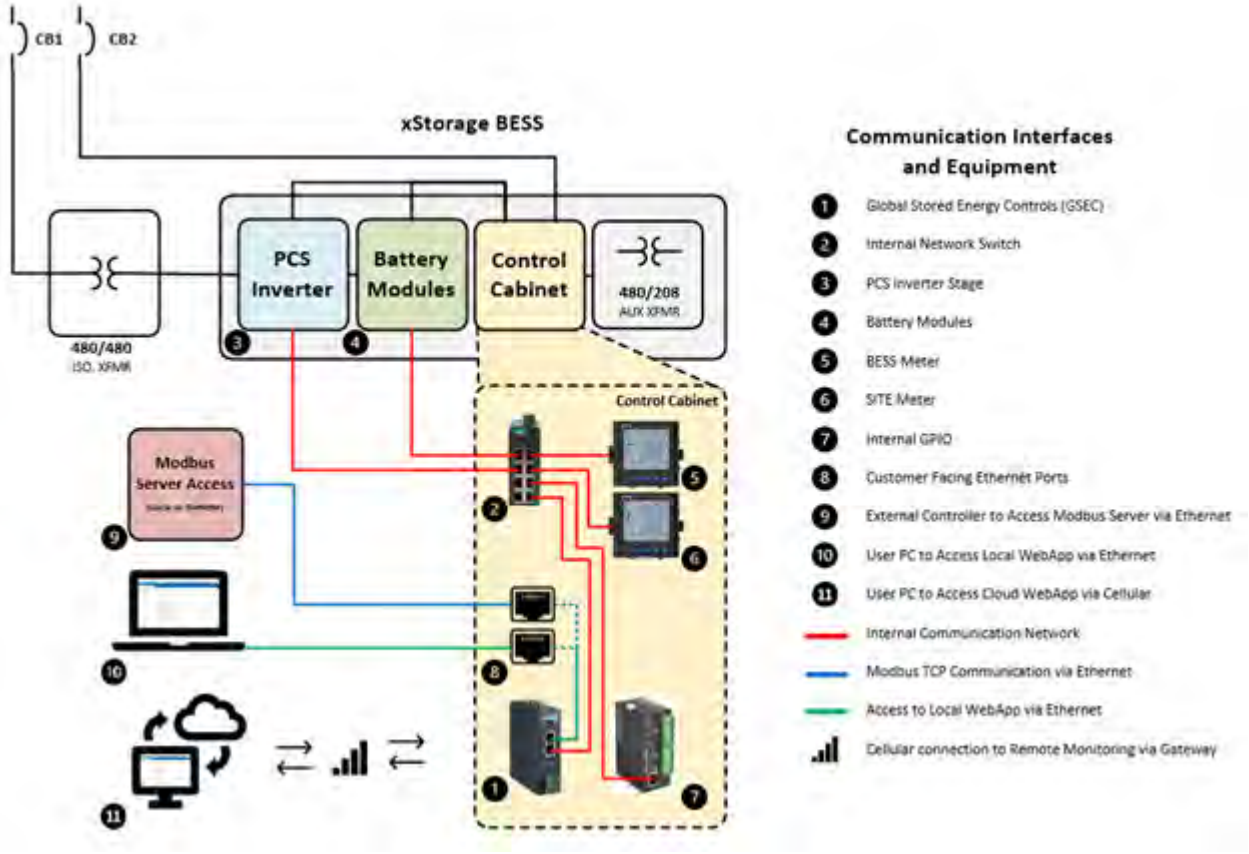

Shown in the diagram above, component (8) depicts customer facing ethernet ports. Based on the application, there are two locations for ethernet connection inside the control cabinet which provides the user an access point for the Local WebApp as well as the Modbus Server.

1. Front Panel Customer Ethernet Port – Temporary Communication Connections

a. Behind the front door of the Control Cabinet is an ethernet port which ties into the GSEC customer facing communication network.

b. Both the Local WebApp and Modbus Server are accessible.

c. This port is intended for temporary connection and access to the user interfaces as it requires a user be present at the unit with the front door of the control cabinet open.

2. Internal Customer Ethernet Ports – Permanent Communication Connections

a. Internal to the Control Cabinet, accessed by the rear door, there are several additional ethernet ports which tie into the GSEC customer facing communication network.

b. Both the Local WebApp and Modbus Server are accessible.

c. This port is intended for more permanent connection and access to the user interfaces as it requires service personnel to install and run externally through conduit.

d. This is the primary connection point for access to the Modbus Server

NOTICE

Eaton Service is required for connections made to the internal Customer Ethernet Ports.

Beyond the wired connection, a cloud-based interface is also available.

1. Cloud WebApp – Primary Wireless Communication Connection

a. Through the integration of Eaton **Remote Monitoring™,** a user can access a cloud based WebApp for configuration, control, and monitoring of the BESS.

b. The xStorage BESS communicates to the cloud via cellular so that access is available remotely regardless of location, as this interface does not require the user to be physically connected to the device.

6.3 Using the Local User Interfaces

This section describes how a user can utilize each of the three Local User Interfaces to configure, control, and monitor the xStorage BESS. Note that all three interfaces work in conjunction, meaning that a change in one will reflect in the others. Any of the three interfaces can be used to operate the BESS. Remember that the Local User configurations will only apply to the system when it is operating in Local User Mode. Similarly, commands will only be accepted from the Local User Interfaces while the unit is operating in Local User Mode.

In 6.1 *Parameter List*, various tables were presented of configuration, control, monitoring, alarms, and other parameters for the xStorage BESS. Each of these Local User Interfaces use a subset of these parameters.

6.3.1 Local WebApp

The Local WebApp has five main pages that can be used for configuration, control, and monitoring of the xStorage BESS.

A. Control

The Control page primarily allows the user to initiate state commands and fault/warning clear commands, as well as provides an indication of statuses and quick access to Energy Service configuration. The Figure 59 below highlights key components of the Control page.

Figure 59. Local WebApp Control Page

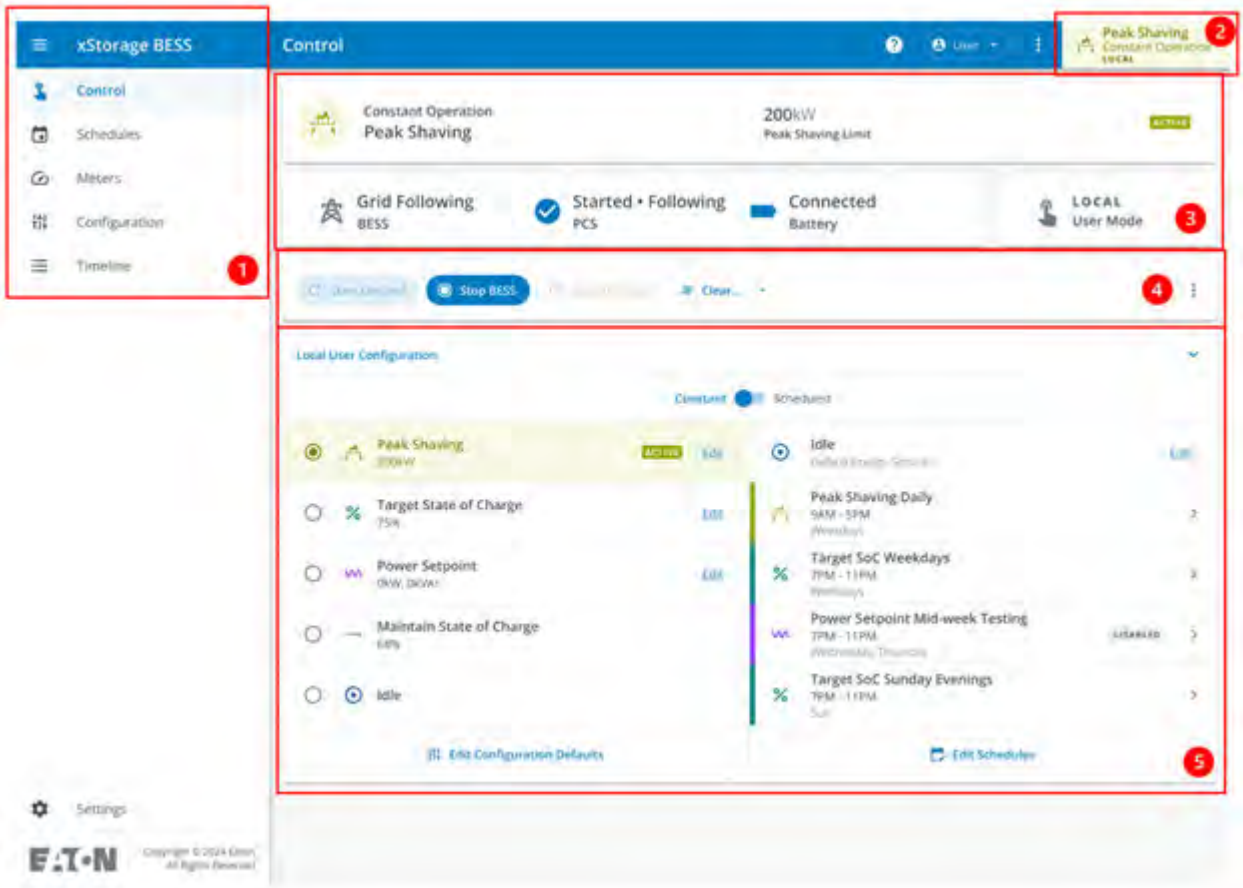

Numbered in the above figure, the Controls page contains the following key components:

1. Collapsible side drawer
   a. Persists across all pages
   b. User can navigate between pages
2. Status Chip
   a. Persists across all pages
   b. Displays from top to bottom:
      i. Active Energy Service
      ii. Active Operation Mode
      iii. Active User Mode
3. Critical State components for quick reference
   a. Active Energy Service and corresponding Energy Service setting
   b. States of each main system component:
      i. BESS State

ii. PCS State

iii. Battery State

c. Active User Mode

4. Controls Bar

a. Quick access buttons:

i. Start BESS On-Grid (in grid-following mode)

ii. Start BESS Off-Grid (in grid-forming, black start)

iii. Stop BESS

iv. Clear dropdown (clear buttons for faults and warnings by component)

v. Dropdown for granular BESS state control (right side of panel)

1) Start BESS On-Grid

2) Start BESS Off-Grid

3) Stop BESS

4) Start PCS On-Grid

5) Start PCS Off-Grid

6) Stop PCS

7) Connect Battery

8) Disconnect Battery

b. Quick Access to Primary Local User Configuration Parameters

i. Operation Mode slider

ii. Selected Constant Operation Mode Energy Service (left side)

1) Quick access to edit Energy Service specific parameters

2) Link to full Configuration page

iii. Upcoming Scheduled Events

1) Quick access to Event details

2) Quick access to Schedules page

iv. Note the configuration on the controls page mirror those in the full Configuration page

B. Schedules

The Schedules page allows the user to configure up to 10 events which will automatically operate in their specified time window, given the BESS is operating in Scheduled Operation Mode.

Schedule configurations repeat on a weekly basis.

Figure 60. Local WebApp Schedules Page

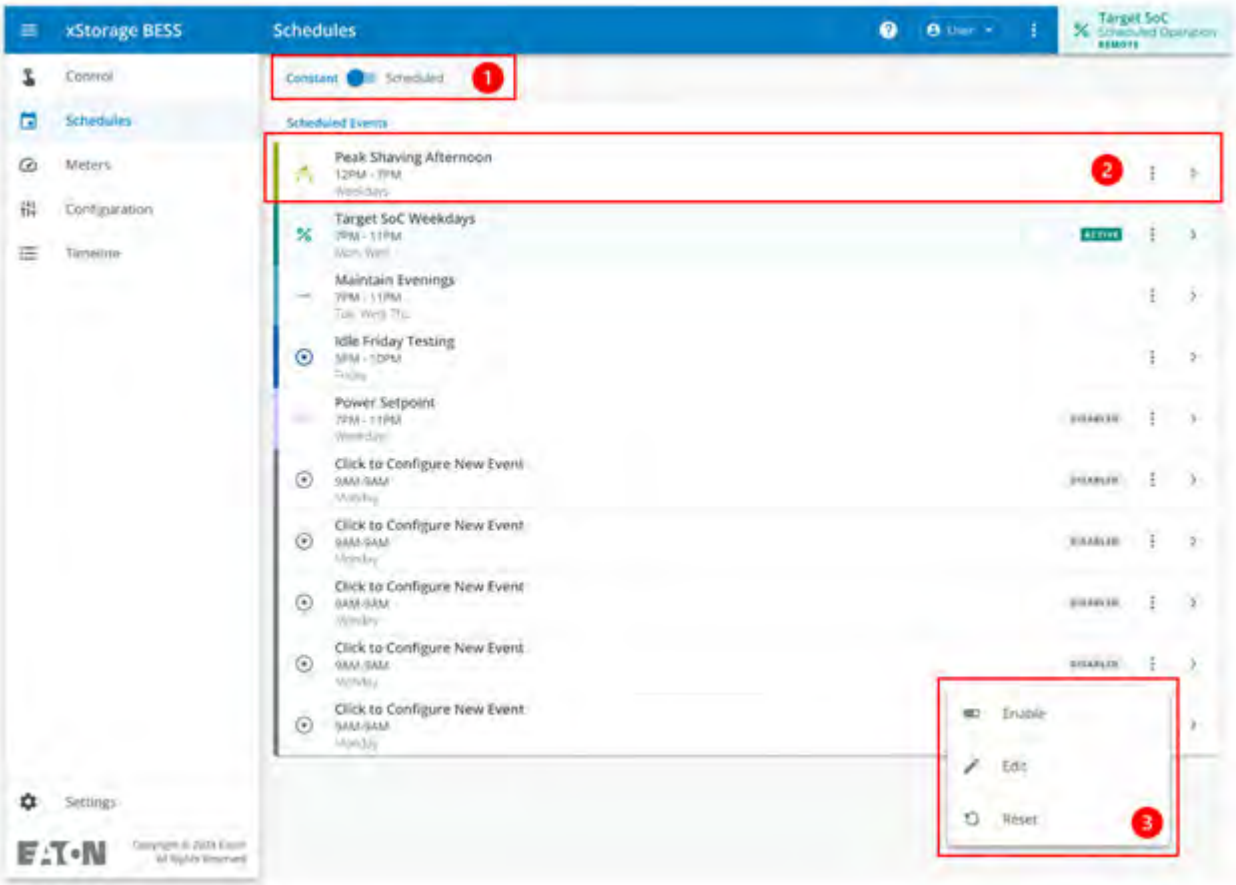

Numbered in the above Figure 60, the Schedules page contains the following key components:

1. Quick access to changing between Constant and Scheduled Operation Mode
2. Events List
   a. User has the ability to configure up to 10 events
   b. Each list item will display
      i. Event Name
      ii. Selected Energy Service
      iii. Time of Event
      iv. Day(s) of Event
      v. Active and Enabled Status
   c. Dropdown menu options per event
   d. Clicking a list item will take the user to the Event Details screen
3. Dropdown menu options for each list item
   a. Enable/Disable the event

b. Edit (takes the user to the Event Details screen)

c. Reset (resets the Event to the default configuration)

NOTICE

There will always be 10 placeholders for events. Upon resetting an event from the Local WebApp, the configuration will be set to an empty Idle event that is disabled by default.

By clicking on an event, the user can view and edit the event details.

Figure 61. Local WebApp Event Details Page

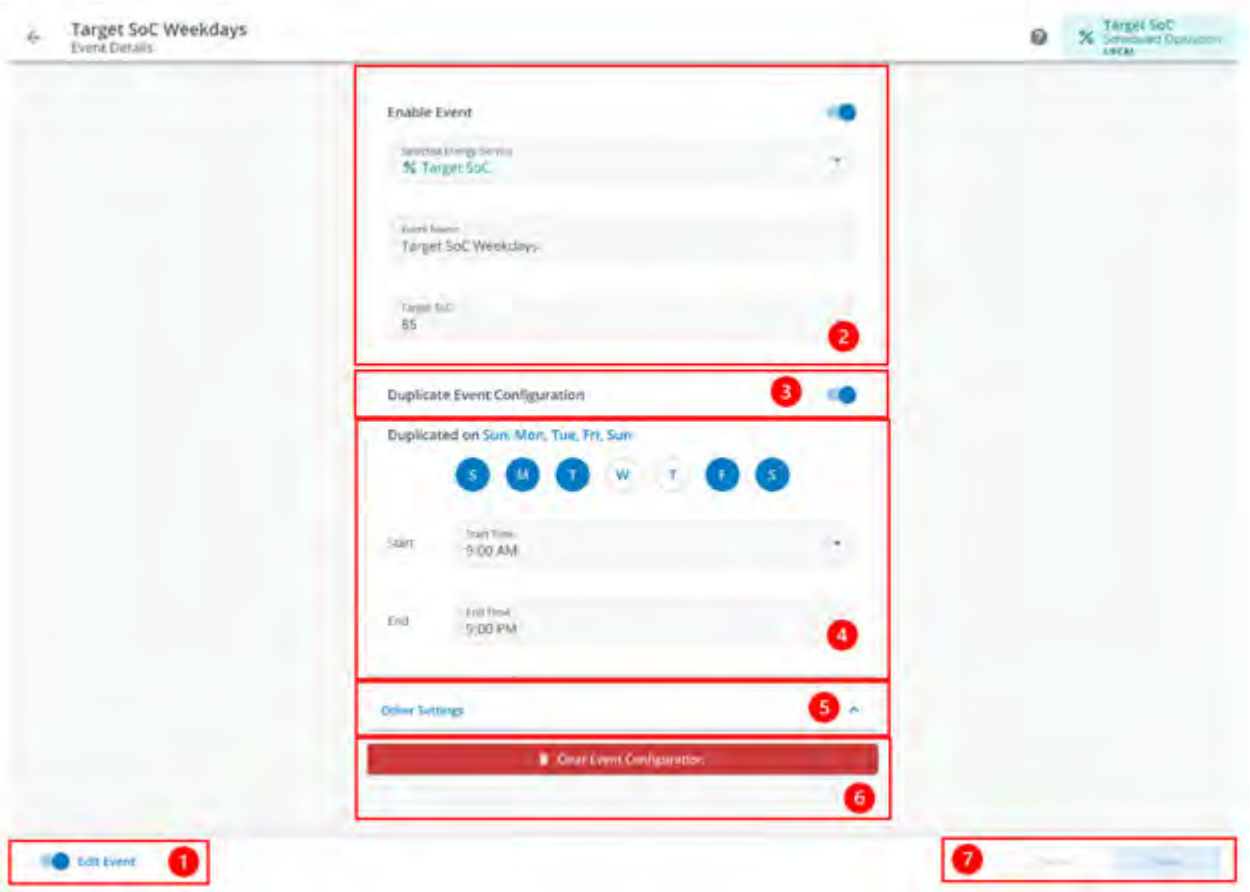

Numbered in the above figure, the Event Details page contains the following key components:

1. Toggle to view/edit event details
2. Primary event details configuration
   a. Enabled/Disabled
   b. Selected Energy Service
   c. Event name
   d. Energy Service specific parameters

3. Single/Duplicate event configuration toggle
4. Start time, stop time, and days selection
    a. Single events are configured by:
        i. Start time
        ii. Start day
        iii. Stop time
        iv. Stop day
    b. Duplicate events are configured by:
        i. Start time
        ii. Stop time
        iii. Selected days
5. Other settings
    a. Each event contains other settings which default from the Constant Operation Mode equivalents (ex. Maximum Charge Power). However, it is possible to modify these parameters per event to offer additional flexibility and capability.
6. Clear Event Configuration
    a. Resets configuration parameters to the default empty event and disables it
7. Clear/Save button

C. Meters

The Meters page displays state, measurement, and calculation information from the xStorage BESS system. There is an overview page, as well as drill-down pages.

Figure 62. Local WebApp Meters Page

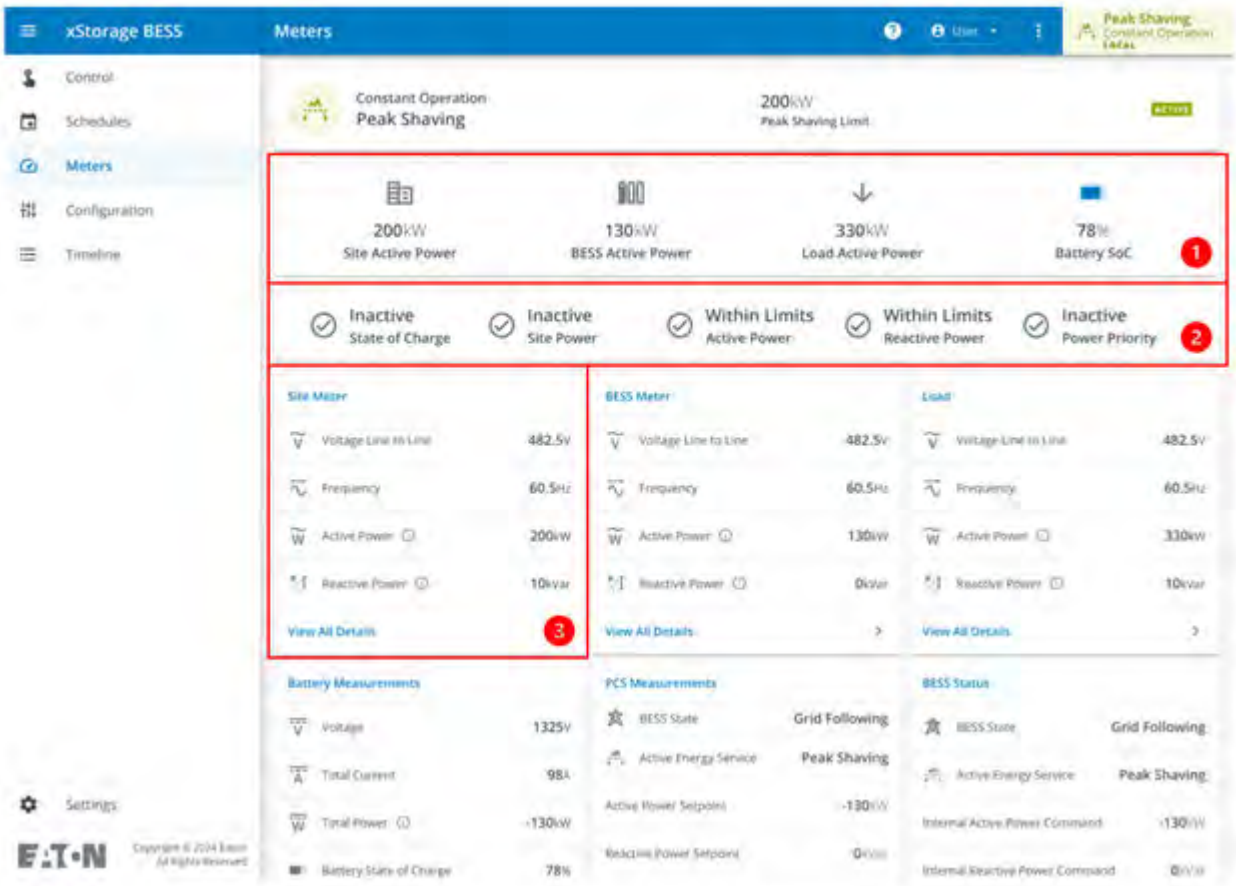

Numbered in the above figure, the Meters page contains the following key components:

1. Hero Bar to display four key measurements for the BESS:
   a. Site Active Power
   b. BESS Active Power
   c. Load Active Power
   d. Battery SoC
2. Limiter Status Bar to highlight when limiters are active:
   a. State of Charge Limiter
   b. Current Limiter
   c. Site Power Limiter
   d. Active Power Limiter
   e. Reactive Power Limiter
   f. Power Priority Limiter
3. Metering Tiles for each of the following 6 components:

a. Site Meter
b. BESS Meter
c. Load Calculations
d. Battery Measurements
e. PCS Measurements
f. State Monitoring

Each of the 6 tiles has a 'View All Details' button which drills down into the associated Meter Details page for the component.

Figure 63. Local WebApp Meter Details Page

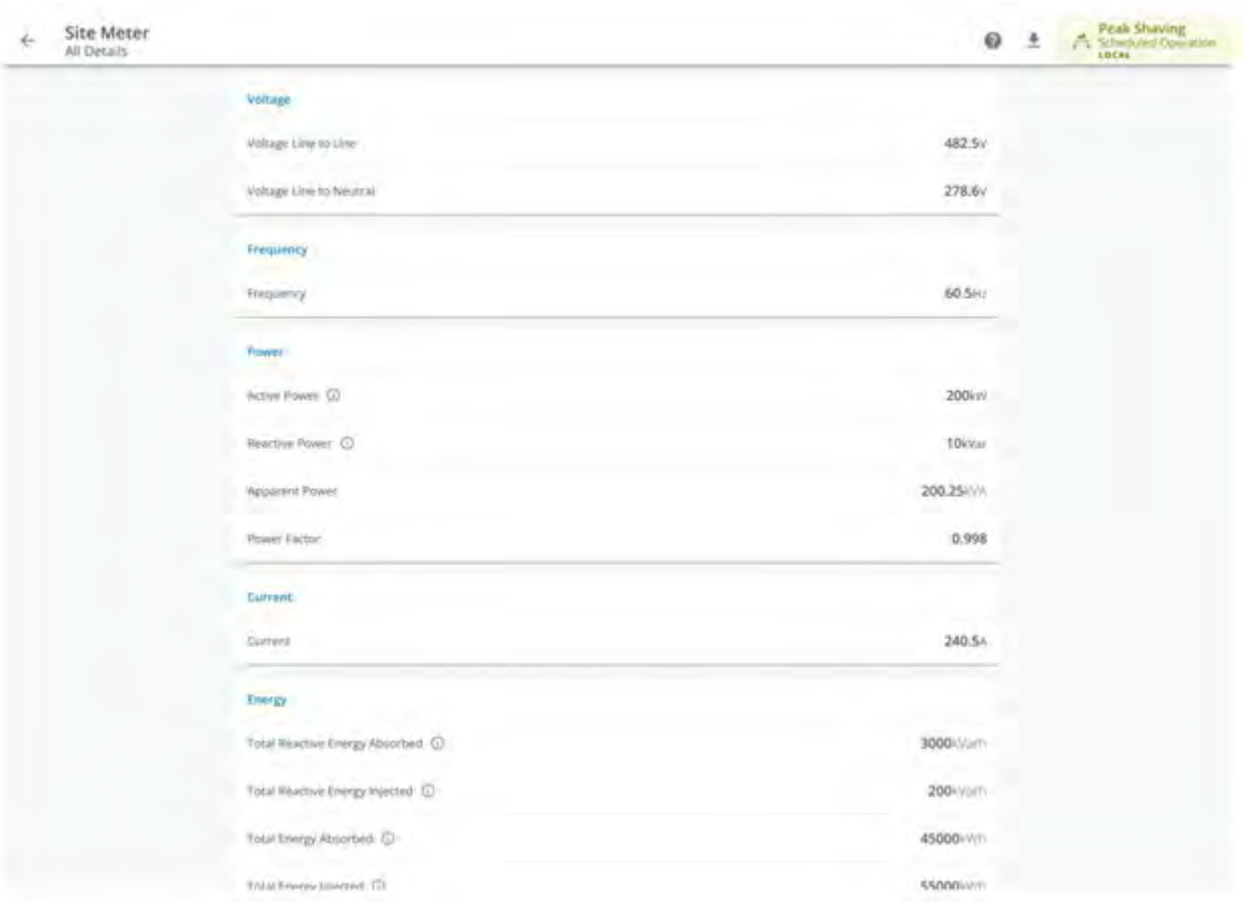

D. Configuration

The Configuration contains all configuration parameters for the xStorage BESS. Note that some of these parameters are accessible from the other pages. Any edit to these parameters will update them in all locations throughout the WebApp.

Note that depending on login level (Eaton Service vs. User), some parameters may be read only.

Figure 64. Local WebApp Configuration Page

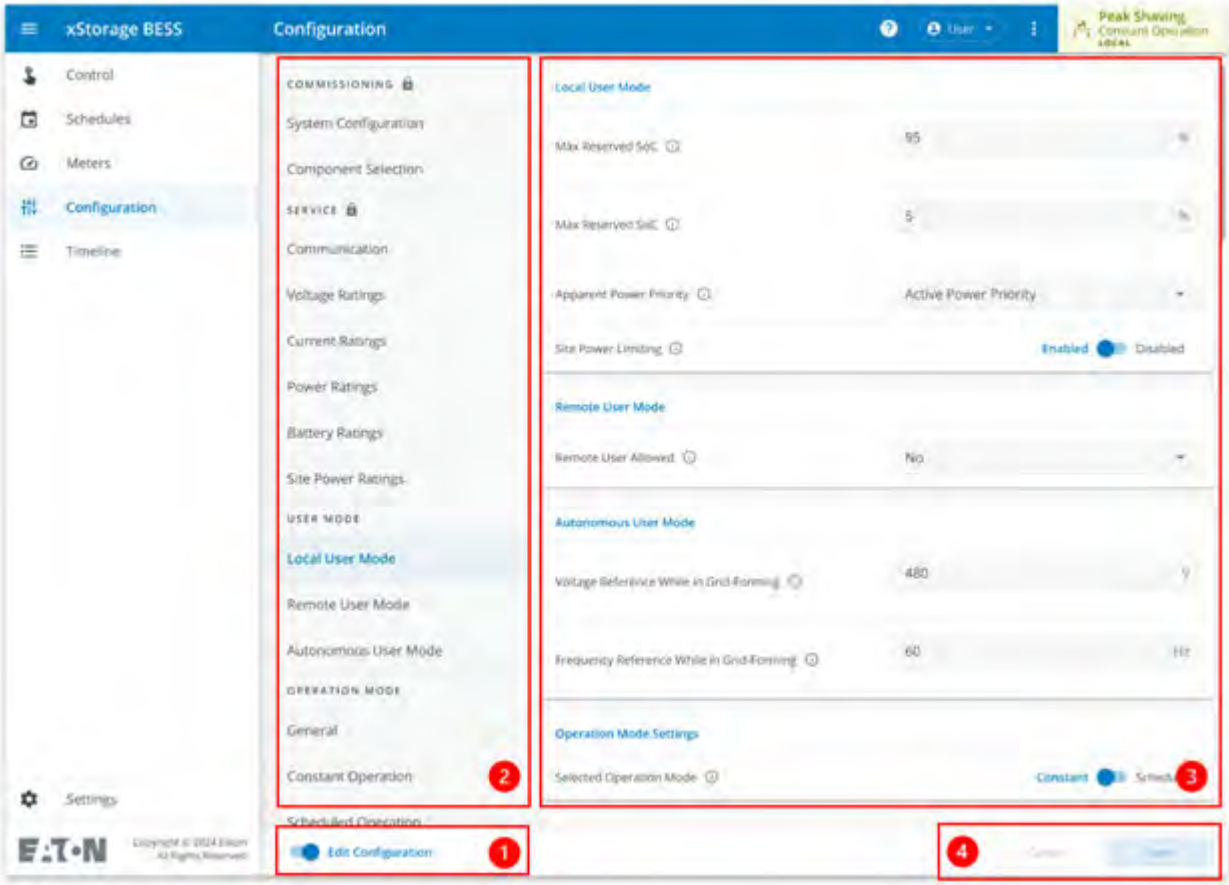

Numbered in the above figure, the Meters page contains the following key components:

1. Toggle to view/edit the current configuration
2. Menu of grouped parameters. Parameters are grouped into the following sections. A typical user will have write access to User Mode and Operation Mode settings.
   a. Commissioning
   b. Service
   c. User Mode
   d. Operation Mode
3. Parameters, organized by group
4. Cancel/Save configuration buttons

E. Timeline

The Timeline captures timestamped Alarms/Notifications, Configuration changes, and Control input and also serves as a diagnostic tool for faults and warnings.

Figure 65. Local WebApp Configuration Page

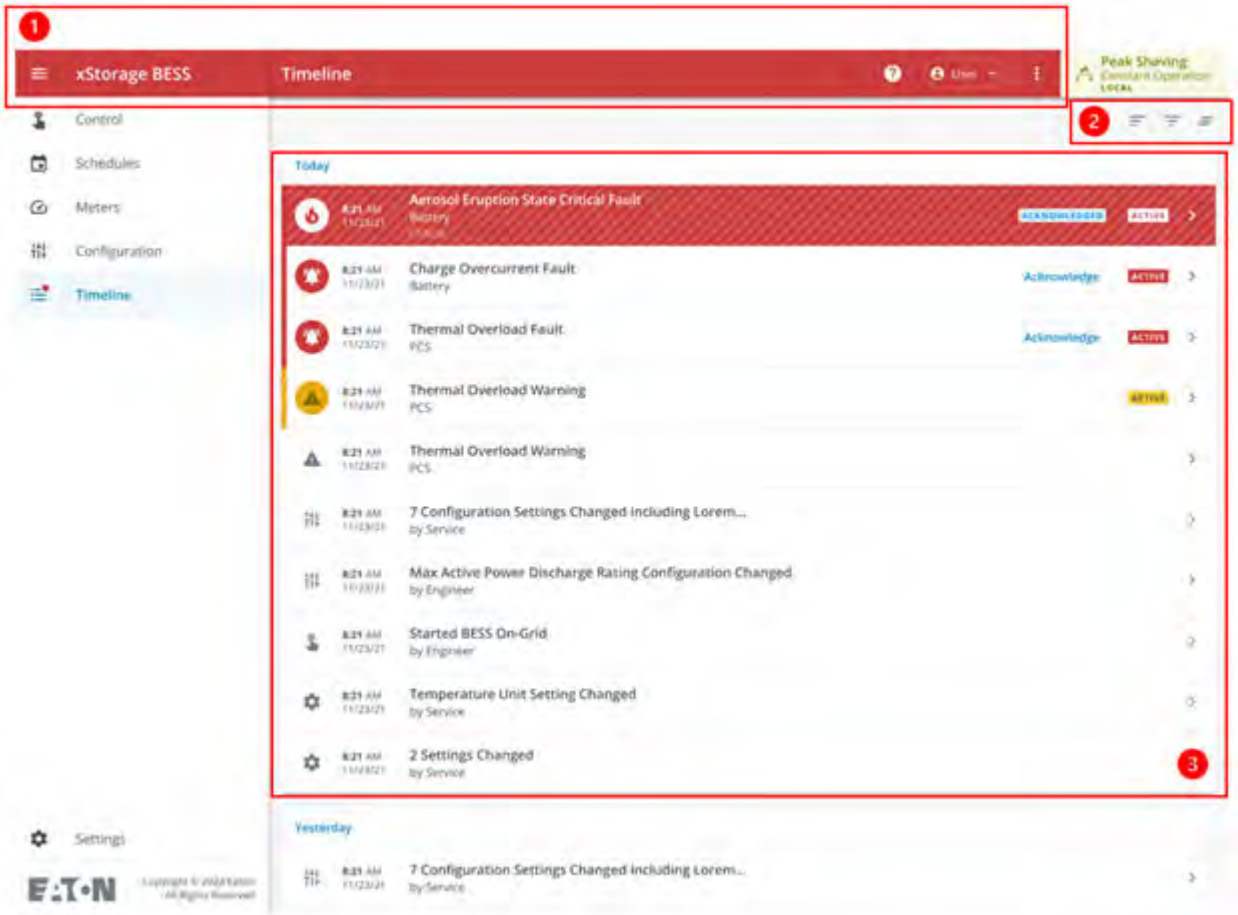

Numbered in the above figure, the Meters page contains the following key components:

1. When a fault is active, the main banner will highlight red throughout the WebApp
2. Sort and filter buttons, as well as quick access to fault and warning clear commands
3. List of alarms and other notifications.
    a. There are several types, with corresponding log levels:
        i. Alarm
            1) Critical Fault
            2) Fault
            3) Warning
            4) Notification
        ii. Configuration Change
            1) Notification
        iii. Control Input Change

1) Notification

b. The icons, badges, and banners are used to indicate status.

i. Statuses are:

1) Inactive/Active

2) Unacknowledged/Acknowledged

ii. Only critical Faults, Faults, and Warnings display an active status on the right side of the list item

iii. Only critical Faults and Faults can be acknowledged and show an acknowledged status

Each item in the Timeline list has a drill-down page for additional details. An example is shown below.

Figure 66. Local WebApp Timeline Details Page

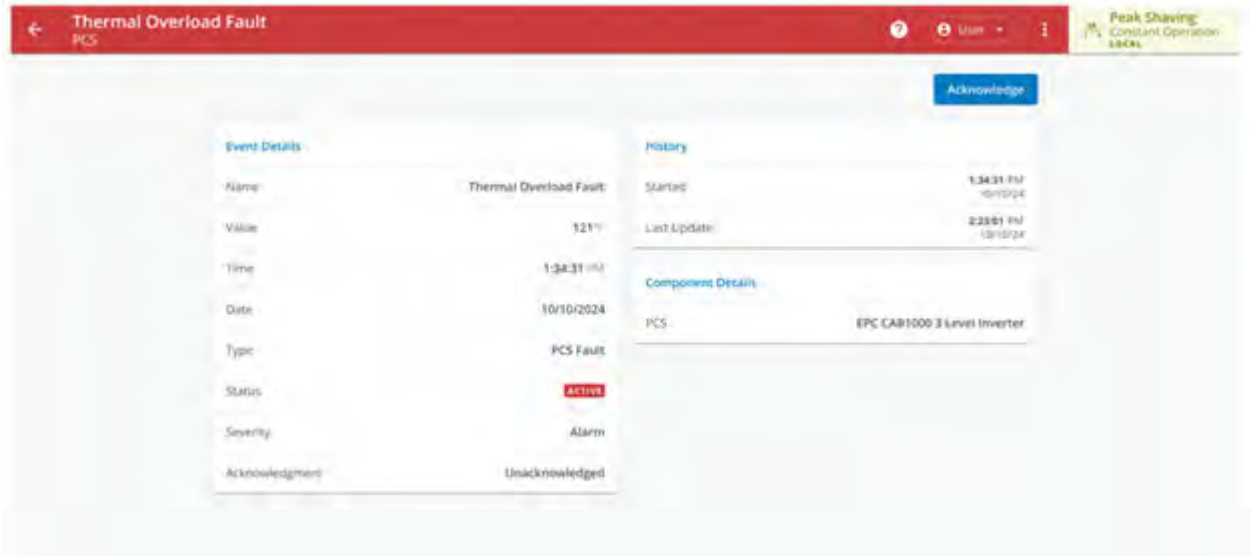

6.3.2 Cloud WebApp

The Eaton Remote Monitoring™ Cloud WebApp replicates the same configuration, control, and monitoring as the Local WebApp in the previous section. However, it is accessible via the internet and does not require a physical ethernet connection like the Local WebApp does.

[MORE DETAILS TO BE ADDED]

6.3.3 Local Modbus Interface

The Local User also has access to a Local Modbus Interface via ethernet connection to the GSEC controller network. As previously defined, there exists one Modbus Server on the GSEC that a customer may use to interact with the device. However, there are two Modbus Device ID's associated with the server:

- Device ID: 1 – designated for Local User applications
- Device ID: 2 – designated for Remote User applications

While many of the registers overlap, the Local User Modbus Map and Remote User Modbus Map are different. Always ensure the correct Modbus Map for the application is used.The Modbus Map utilizes SunSpec format, but not all SunSpec information is relevant to xStorage BESS operations and therefore some registers are

omitted. Furthermore, some registers are specific only to xStorage BESS. The SunSpec 700 Series and 800 Series models are standard, while 65000 Series are Eaton specific models.

The Local Modbus Interface can be thought of as a 'headless' WebApp interface. All relevant Local User parameters defined in the tables in 6.1 *Parameter List* exist in the Local Modbus Map. The Local Modbus Interface provides a customer flexibility in integrating the xStorage BESS into their system, controls, and monitoring platforms. As a Local User Interface, the Modbus Map provides all functionalities provided to Local Users, including all Energy Services, scheduling events, etc.

Remember, all three Local User Interfaces work in conjunction. A change in a Local Modbus Interface register will be reflected as a change in the Local WebApp and Cloud WebApp.

The Modbus Map provided by Eaton is Firmware specific. Always ensure the Modbus Map you are referring to corresponds to the same version of firmware installed on the GSEC controller.

The Local User Modbus Map can be obtained from your Eaton representative.

6.4 Remote User Interfaces

This section describes how a user can utilize the Remote User Interfaces to configure, control, and monitor the xStorage BESS. Remember that the Remote User configurations will only apply to the system when it is operating in Remote User Mode. Similarly, commands will only be accepted from the Remote User Interfaces while the unit is operating in Remote User Mode.

6.4.1 Using the Remote Modbus Interfaces

The Remote User has access to a Remote Modbus Interface via ethernet connection to the GSEC controller network.

The Remote Modbus Interface provides the means by which a higher-level controller can operate the BESS as an asset. By contrast to the Local Modbus Interface, the Remote Modbus Interface (and furthermore, Remote User Mode) simplifies the control strategy of the GSEC. The Remote User application primarily requires state commands and the capability to pass power setpoints, as typical applications for Remote Users include microgrids where a microgrid controller manages all DER assets at a higher level, determining the proper setpoints to pass to the BESS. The Remote User does not require standalone Energy Services such as Peak Shaving.

All relevant Remote User parameters defined in the tables in 6.1 *Parameter List* exist in the Remote Modbus Map. The Remote Modbus Interface provides a customer flexibility in integrating the xStorage BESS into their system as an energy storage asset.

Remember, the Remote User Interface is separate from the Local User Interfaces. A configuration change in the Remote Modbus Server only affects Remote User configurations. Furthermore, Remote User configurations and commands from the Remote Modbus Server only take effect while in Remote User Mode.

The Modbus Map provide by Eaton is Firmware specific. Always ensure the Modbus Map you are referring to corresponds to the same version of firmware installed on the GSEC controller.

The Remote User Modbus Map can be obtained from your Eaton representative.

6.5 Transitioning Between Local and Remote User Modes

In Chapter 5 *Understanding BESS Operation*, it was noted that the xStorage BESS can switch between User Modes for specific applications. Two notable examples are:

- Switching from Local User Mode to Remote User Mode to allow a higher-level controller to take momentary or extended control.
- Forcing a switch from Remote User Mode to Local User Mode to perform maintenance activities using the Local Interfaces.

In order to manage these transitions, the GSEC controller utilizes prioritization logic of two parameters.

- The first, LOCAL_SET_RemoteUserAllowed, is a parameter accessible only by the Local User Interfaces. It is a setting to enable/disabled access of a Remote User to take control and it can be used as an override to return to Local User Mode.
- The second, REMOTE_SET_LocalRemoteMode, is a parameter accessible only by the Remote User Interface. It is a request type of parameter that is meant to initiate a transition to Remote User Mode, or release control back to the Local User Interfaces.

Table 24 below defines the parameters further and notes where they are accessed within the user interfaces. Table 25 below defines the resulting User Mode based on the combination of the two parameters.

Table 24. Local and Remote User Mode Relevant Logic Parameters

Parameter Name	Description	Access		
LOCAL_SET_ RemoteUserAllowed	Local User Setting - Remote User Allowed	Local Modbus Map	Local WebApp	Cloud WebApp
	Local User setting to enable and disable a Remote Local User's ability to take control of the BESS.	Register 1193	Remote User Allowed [Configuration Page]Force Local User [Control Page]	TBD
	[0] Remote User Not Allowed (Default)[1] Remote User Allowed			
REMOTE_SET_ LocalRemoteMode	Remote User Setting - Local or Remote User Mode	Remote Modbus Map		
	Remote User setting to request the system to change between Local and Remote User Mode.	Register 1193		
	[0] Local User Mode Selected (Default)[1] Remote User Mode Selected			

Table 25. Local and Remote User Logic

Combination	LOCAL_SET_RemoteUserAllowed	REMOTE_SET_LocalRemoteMode	Resulting User Mode
1	[0] Remote User Not Allowed	[0] Local User Mode Selected	[0] Local User Mode
2	[0] Remote User Not Allowed	[1] Remote User Mode Selected	[0] Local User Mode
3	[1] Remote User Allowed	[0] Local User Mode Selected	[0] Local User Mode
4	[1] Remote User Allowed	[1] Remote User Mode Selected	[1] Remote User Mode

6.6 Autonomous State and User Interfaces

The Autonomous State is to be interpreted as an extension of either Local User Mode or Remote User Mode. When in the Autonomous State, a user's controls will be limited to state commands to allow the user to shut down the BESS as needed. The BESS will operate in grid-forming mode throughout the Autonomous state and therefore, will only use relevant grid-forming configurations. Energy Services will be disabled during the Autonomous State.

During the Autonomous State, there may be a need to transition between Local User Mode (Autonomous) and Remote User Mode (Autonomous). For example, for a system operating in Remote User Mode (Autonomous)

during an outage, it may be required to force Local User Mode (Autonomous) from the Local WebApp in order to enable shutdown of the BESS from the Local WebApp interface.

In the same way that LOCAL_SET_RemoteUserAllowed and REMOTE_SET_LocalRemoteMode were used to configure transitions between Local User Mode and Remote User Mode, these parameters are used in the same combinations to transition between these User Modes in the Autonomous state. The table below draws the comparison.

Table 26. Local and Remote User Logic While in Autonomous State

Combination	LOCAL_SET_RemoteUserAllowed	REMOTE_SET_LocalRemoteMode	Resulting User Mode
1	[0] Remote User Not Allowed	[0] Local User Mode Selected	[2] Local User Mode (Autonomous)
2	[0] Remote User Not Allowed	[1] Remote User Mode Selected	[2] Local User Mode (Autonomous)
3	[1] Remote User Allowed	[0] Local User Mode Selected	[2] Local User Mode (Autonomous)
4	[1] Remote User Allowed	[1] Remote User Mode Selected	[3] Remote User Mode (Autonomous)

NOTICE

The source code of open source components which are made available by their licensors (including Eaton where applicable) may be obtained upon written express request by contacting: edgex-support@eaton.com

Eaton reserves the right to charge minimal administrative costs, in compliance with the terms of the underlying open source licenses, when necessary.

Chapter 7 BESS Operating Instructions

Chapter 5 *Understanding BESS Operation* defined the xStorage BESS and its components within a power system. It also described the strategy of organizing controls and configurations by User Modes, Operation Modes, and Energy Services, as well as noting limiters and other specific applications such as self-consumption and grid-forming.

Chapter 6 *Configuration, Control, and User Interfaces* described how to properly configure, control, and monitor the BESS, via accessing various parameters through the user interfaces introduced in the previous section.

Built in the context of the previous two chapters, this chapter will review basic startup procedures, shutdown/decommissioning, and the critical emergency procedures and functions of the BESS.

7.1 Startup Procedure: Grid Connected

The most typical startup scenario is a grid connected start. In this case, the utility voltage is present to supply auxiliary power to the Control Cabinet, which routes auxiliary power to all components of the BESS. Since the grid is present, the BESS will startup synchronized to the grid voltage and frequency in grid-following mode and immediately be able to exchange power with the grid via charging and discharging of the batteries.

This section outlines a detailed procedure in order to properly startup the unit with the grid present.

Figure 67, below, depicts a generic power system layout for BESS applications.

Figure 67. xStorage 250-1000 Generic Power System Layout

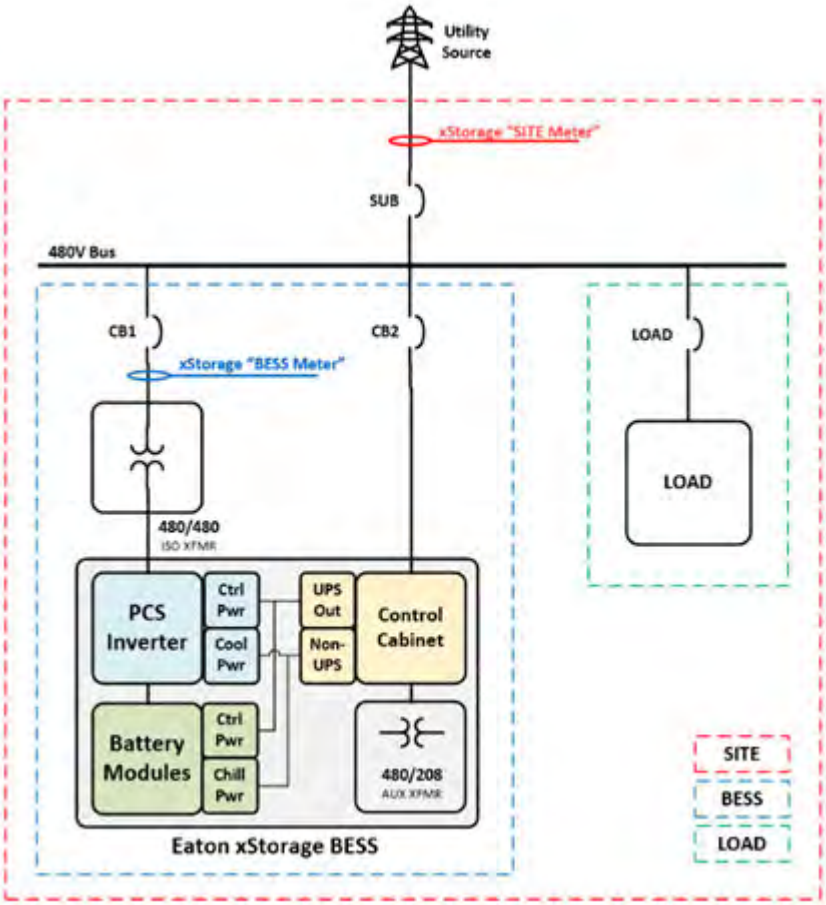

NOTICE

Eaton Service shall be responsible for establishing the following initial conditions for proper grid startup following commissioning. If there are any issues starting the unit, please contact your Eaton Service representative for support.

Initial conditions for this procedure are as follows:

- The grid voltage must be present.
  - In the figure, the main 480V bus shall be energized.
  - Any upstream breakers must be closed such that the line side of CB1 and CB2 are energized.
- CB1 and CB2 are closed.
  - CB1 ensures that the BESS main power stage is connected into the 480V system.
  - A closed CB2 ensures that the Control Cabinet receives 480V, such that it can supply auxiliary control power to all components of the system.

7.1.1 Basic Standalone BESS Operation as a Local User

In this example, a Local User is controlling the BESS to startup grid-connected, in Constant Operation Mode, running the Idle Service and then switching into the Peak Shaving Service. The following are suggested steps for proper startup. The procedure will be described for using both the Local WebApp and Local Modbus Interface side by side, as the internal parameters are exactly the same.

Startup Procedure:

1. Verify auxiliary power is present on both the inverter cabinet and all battery cabinets.
   a. Battery Cabinets
      i. The green LV LED will illuminate on the front panel of each battery cabinet if auxiliary power is properly applied.
   b. Inverter Cabinet
      i. The blue POWER LED will illuminate on the front panel of the inverter cabinet if auxiliary power is properly applied.

Figure 68. Inverter and Battery Auxiliary Power Indicator Locations

2. Ensure that the Functional STOP (F-STOP) has been released on the inverter cabinet.

Figure 69. Inverter F-Stop Location

3. Navigate to one of the Local User Interfaces and verify communication to the GSEC controller.
   a. Local WebApp – connected via ethernet to the customer port, open a web browser and navigate to http://XXX.XXX.XXX.XXX/webapp
   b. Cloud WebApp – open an internet browser and navigate to https://brightlayer-rm-r2-perf.eaton.com/eaton/login (This will change)
   c. Local Modbus Interface – connected via ethernet to the customer port, establish a Modbus Client connection to IP: XXX.XXX.XXX.XXX, Device ID: 1

NOTICE

Consult Eaton Service if you are unable to establish communication via one of the Local User Interfaces.

4. From the user interface, verify Limit Settings.
   a. First, verify that the limit settings are properly set for the system. This involves checking the Site Power Limits, Active and Reactive Power Limits, and SoC Limits. The table below lists the relevant parameters to be verified.

Table 27. Local User Startup – Limit Settings

Parameter Name	Local WebApp Parameter	Local Modbus Map Register	Value
LOCAL_COM_ExportLimit	[Configuration] Export Limit	3011	According to system
LOCAL_COM_ImportLimit	[Configuration] Import Limit	3012	According to system
LOCAL_COM_MaxAbsorb	[Configuration] Max Reactive Power Absorb Rate	3010	According to system
LOCAL_COM_MaxCharge	[Configuration] Max Active Power Charge Rate	3007	According to system
LOCAL_COM_MaxDischarge	[Configuration] Max Active Power Discharge Rate	3008	According to system
LOCAL_COM_MaxInject	[Configuration] Max Reactive Power Inject Rate	3009	According to system
LOCAL_SET_ MaxReservedSoC	[Configuration] Max Reserved SoC	1209	According to system
LOCAL_SET_ MinReservedSoC	[Configuration] Min Reserved SoC	1210	According to system

5. From the user interface, confirm Operation Mode and Energy Service settings.
   a. Next, confirm the Operation Mode and Energy Service settings to ensure the unit will startup in Constant Operation Mode, running the Idle Service.

Table 28. Local User Startup – Operation Mode and Energy Service Settings

Parameter Name	Local WebApp Parameter	Local Modbus Map Register	Value
LOCAL_SET_ OperationMode	[Configuration/Control] Operation Mode	3006	[0] Constant Operation Mode
LOCAL_COM_ EnergyService	[Configuration/Control] Energy Service	3013	[1] Idle Service

6. From the user interface, clear any faults.
   a. If the BESS control power was just applied, there may be a few Power-On-Reset type faults. Clear the faults utilizing the command in the table below.

Table 29. Local User Startup – Clear Faults and Warnings

Parameter Name	Local WebApp Parameter	Local Modbus Map Register	Value
CMD_ ClearFaultWarningCmd	[Control/Timeline] Clear Button	4003	[9] Clear All BESS Faults and Warnings

7. Verify fault clearing through indicators. See Figure 73 for details.

8. From the user interface, verify the BESS Offline state.
   a. Read the BESS State parameter to ensure that the BESS is in the Offline state. The BESS may only be commanded to start when in the Offline state.

Table 30. Local User Startup – BESS State Verification Before Startup

Parameter Name	Local WebApp Parameter	Local Modbus Map Register	Value
STATE_BESSState	[Control/Meters] BESS State	5002	[2] Offline

9. From the user interface, command a Start BESS On-Grid (Goto Following).
   a. From the Offline state, command an On-Grid BESS start from either interface according to the table below. Note that the local grid must be available in order to start in grid-following (grid-connected) mode.

Table 31. Local User Startup – Command On-Grid Start

Parameter Name	Local WebApp Parameter	Local Modbus Map Register	Value
CMD_BESSStateCmd	[Control] Start On-Grid Button	4002	[3] Goto Following

10. Verify high voltage and run indicators.
    a. Battery Cabinets
       i. The red HV LED will illuminate on the front panel of each battery cabinet when the high voltage DC relay has closed in each cabinet. This establishes the HVDC connection to the inverter stage.
    b. Inverter Cabinet
       i. Upon successful startup of the inverter stage, the green RUN LED will illuminate on the front panel of the inverter cabinet.

Figure 70. Inverter and Battery Run Indicator Locations

11. From the user interface, verify the BESS Grid-Following state.
    a. Read the BESS State parameter to ensure that the BESS has properly reached the Grid-Following state. Furthermore, read the Operation Mode and Energy Service state parameters to ensure the BESS is operating in the Constant Operation Mode, Idle Service.

Table 32. Local User Startup – BESS State Verification After Startup

Parameter Name	Local WebApp Parameter	Local Modbus Map Register	Value
STATE_BESSState	[Control/Meters] BESS State	5002	[4] BESS Grid Following
STATE_OperationMode	[Control/Meters] Operation Mode	5006	[0] Constant Operation
STATE_EnergyService	[Control/Meters] Energy Service	5007	[1] Idle Service

12. From the user interface, configure the Peak Shaving setpoint.
    a. Use the parameter in the table below to configure a Peak Shaving Target Demand and a Minimum Import Peak Shaving Threshold. Ensure that the Constant Operation Mode specific configuration parameter is edited (rather than any Scheduled Event parameters). Select a Peak Shaving Target Demand that is near the current load demand as to not exceed the maximum active charge and discharge limits.

Table 33. Local User Startup – Configure Peak Shaving Setpoint

Parameter Name	Local WebApp Parameter	Local Modbus Map Register	Value
LOCAL_COM_ EnableMinimumImport	[Control/Configuration] Enable Minimum Import	11002	0
LOCAL_COM_ PeakShavingMinimumIm-port	[Control/Configuration] Minimum Import Peak Shaving Threshold	11003	User specified
LOCAL_COM_ PeakShavingTarget	[Control/Configuration] Peak Shaving Target Demand	3014	User specified

13. From the user interface, enter the Peak Shaving Energy Service.
    a. Finally, reconfigure the selected Energy Service to be Peak Shaving and observe the intended charging or discharging behavior. Use the states and active power measurement parameters to verify proper behavior.

Table 34. Local User Startup – Transition to Peak Shaving Service

Parameter Name	Local WebApp Parameter	Local Modbus Map Register	Value
LOCAL_COM_ EnergyService	[Configuration/Control] Energy Service	3013	[2] Peak Shaving Service
STATE_EnergyService	[Control/Meters] Energy Service	5007	[2] Peak Shaving Service
BESS_ActivePower	[Meters] BESS Active Power	94	Verify power balance
SITE_ActivePower	[Meters] Site Active Power	6002	Verify power balance
LOAD_ActivePower	[Meters] Load Active Power	6027	Verify power balance

7.1.2 Basic Microgrid BESS Operation as a Remote User

In this example, a Remote User is controlling the BESS to startup grid-connected, in Constant Operation Mode, running the PQ Power Setpoint (Closed Loop) Service. The following are suggested steps for proper startup. The procedure will be described for Remote Modbus Interface and necessary registers.

Startup Procedure:

1. Verify auxiliary power is present on both the inverter cabinet and all battery cabinets.
    a. Battery Cabinets
        i. The green LV LED will illuminate on the front panel of each battery cabinet if auxiliary power is properly applied.
    b. Inverter Cabinet
        i. The blue POWER LED will illuminate on the front panel of the inverter cabinet if auxiliary power is properly applied. See Figure 75 for details.
2. Ensure that the Functional STOP (F-STOP) has been released on the inverter cabinet. See Figure 74 for details.

3. Verify communication to the GSEC controller via the Remote Modbus Interface
   a. Remote Modbus Interface – connected via ethernet to the customer port, establish a Modbus Client connection to IP: XXX.XXX.XXX.XXX, Device ID: 2

NOTICE

Consult Eaton Service if you are unable to establish communication via the Remote Modbus Interface.

4. From the modbus interface, if not already active, initiate Remote User Mode.
   a. As indicated in Section 6.5, there are two settings which must be properly set to allow transition to Remote User Mode. From the Local User Interfaces, the LOCAL_SET_RemoteUserAllowed setting must be configured to allow Remote User Mode. Consult the previous sections to enable this setting properly.
   b. Given that the Local User configuration is set properly, request transition to Remote User Mode using the REMOTE_SET_LocalRemoteMode parameter as indicated in the table below. The transition can be verified by monitoring the associated state register.

Table 35. Remote User Startup – Initiate Remote User Mode

Parameter Name	Remote Modbus Map Register	Value
REMOTE_SET_LocalRemoteMode	1193	[1] Remote User Selected
STATE_UserMode	5005	[1] Remote User Mode

5. From the modbus interface, verify Limit settings.
   a. Verify that the limit settings are properly set for the system. This involves checking Active and Reactive Power Limits, and SoC Limits. It is likely Site Power Limits are not required for this application. Disable them using the last configuration parameter in the table below. The table below lists the relevant parameters to be verified.

Table 36. Remote User Startup – Limit Settings

Parameter Name	Remote Modbus Map Register	Value
REMOTE_SET_MaxAbsorb	272	According to system
REMOTE_SET_MaxCharge	273	According to system
REMOTE_SET_MaxDischarge	274	According to system
REMOTE_SET_MaxInject	271	According to system
REMOTE_SET_MaxReservedSoC	1209	According to system
REMOTE_SET_MinReservedSoC	1210	According to system
REMOTE_SET_ DisableSitePowerLimiting	3003	[1] Site Power Limiting Disabled

6. From the modbus interface, confirm the Power Setpoint Type.

a. Next, confirm the Power Setpoint Type is Closed Loop and that the P and Q setpoints are initially set to zero.

Table 37. Remote User Startup – Operation Mode and Energy Service Settings

Parameter Name	Remote Modbus Map Register	Value
REMOTE_SET_PowerSetpointType	3002	[0] Closed Loop Setpoint
REMOTE_SET_PowerSetpoint_P	[334, 335] int32	0 kW
REMOTE_SET_PowerSetpoint_Q	[348, 349] int32	0 kVar

7. From the modbus interface, if not already active, initiate and sustain the controller heartbeat.

   a. In Remote User Mode, the GSEC controller requires a heartbeat from any northbound controller. To avoid a fault as result of loss of heartbeat, the northbound controller must write to the following register within every second, incrementing from 0-255 each interval.

Table 38. Remote User Startup – Initiate and Sustain Heartbeat

Parameter Name	Remote Modbus Map Register	Value
HB_NorthboundHeartbeat	1196	0-255, incrementing once per second

8. From the modbus interface, clear any present faults.

   a. If the BESS control power was just applied or heartbeat just started, there may be a few faults present. Clear the faults utilizing the command in the table below.

Table 39. Remote User Startup – Clear Faults and Warnings

Parameter Name	Remote Modbus Map Register	Value
CMD_ClearFaultWarningCmd	4003	[9] Clear All BESS Faults and Warnings

9. Verify fault clearing through indicators. See Figure 75 for details.
10. From the modbus interface, verify the BESS Offline State.

    a. Read the BESS State parameter to ensure that the BESS is in the Offline state. The BESS may only be commanded to start when in the Offline state.

Table 40. Remote User Startup – BESS State Verification Before Startup

Parameter Name	Remote Modbus Map Register	Value
STATE_BESSState	5002	[2] Offline

11. From the Modbus interface, command a Start BESS On-Grid (Goto Following).

    a. From the Offline state, command an On-Grid BESS start. Note that the local grid must be available in order to start in grid-following (grid-connected) mode.

Table 41. Remote User Startup – Command On-Grid Start

Parameter Name	Remote Modbus Map Register	Value
CMD_BESSStateCmd	4002	[3] Goto Following

12. Verify high voltage and run indicators.
    a. Battery Cabinets
        i. The red HV LED will illuminate on the front panel of each battery cabinet when the high voltage DC relay has closed in each cabinet. This establishes the HVDC connection to the inverter stage.
    b. Inverter Cabinet
        i. Upon successful startup of the inverter stage, the green RUN LED will illuminate on the front panel of the inverter cabinet.

Figure 71. Inverter and Battery Run Indicator Locations

13. From the modbus interface, verify the BESS Grid-Following state.
    a. Read the BESS State parameter to ensure that the BESS has properly reached the Grid-Following state.

Table 42. Remote User Startup – BESS State Verification After Startup

Parameter Name	Remote Modbus Map Register	Value
STATE_BESSState	5002	[4] BESS Grid Following

14. From the modbus interface, configure PQ Power Setpoints.
    a. Use the parameters in the table below to configure Active (P) and Reactive (Q) power setpoints. Ensure that the setpoints are within the maximum active charge and discharge limits.

Table 43. Remote User Startup – Configure PQ Power Setpoints

Parameter Name	Remote Modbus Map Register	Value
REMOTE_SET_PowerSetpoint_P	[334, 335] int32	User setpoint
REMOTE_SET_PowerSetpoint_Q	[348, 349] int32	User setpoint

7.2 Startup Procedure: Grid Disconnected (Black Start)

In specific configurations, the BESS can startup disconnected from the grid (also called Black Start). In a Black Start scenario, the BESS depends on its internal control power UPS to provide critical control power to allow the BESS to start in grid-forming mode. In grid-forming mode, the BESS will establish the local grid by maintaining the voltage and frequency.

This section outlines a detailed procedure in order to properly startup the unit without the grid present.

The BESS must be configured with proper hardware and software configurations to enable grid-forming operation that must be installed during commissioning. For any questions about the system's capability for grid-forming operation, consult with your Eaton Service representative.

Figure 72, below, depicts a generic power system layout for BESS applications that includes automatic grid-forming capabilities. In applications where grid-forming is managed manually by a higher-level controller, the system layout may vary.

Figure 72. xStorage 250-1000 Generic Power System Layout with Automatic Grid-Forming Control

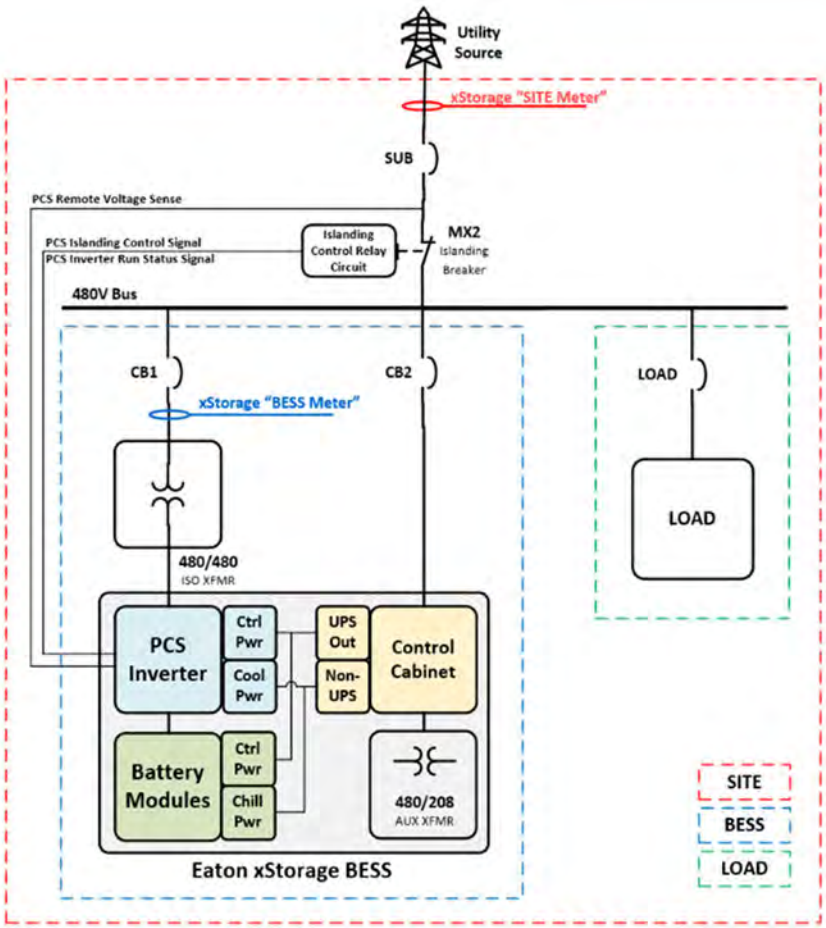

NOTICE

Eaton Service shall be responsible for establishing the following initial conditions for proper grid startup following commissioning. If there are any issues starting the unit, please contact your Eaton Service representative for support.

Initial conditions for this procedure are as follows:

- The BESS must be enabled for grid-forming operation.
- The internal control power UPS must be connected and on battery.
  - This black start scenario is relevant to systems in which the UPS is already on internally.
  - This scenario could occur following a utility outage in which the Control Cabinet formerly was supplied power from the utility.

NOTICE

When the internal UPS goes on battery, there is a finite amount of time for which black start is possible before the internal UPS battery depletes fully. To black start from a fully deenergized Control Cabinet in which the UPS is off, Eaton Service is required to manually start the internal UPS to begin the black start process.

- CB1 and CB2 are closed.
  - CB1 ensures that the BESS main power stage is connected into the 480V system. This is required for the BESS to establish the local grid after starting in grid-forming.
  - A closed CB2 ensures that the Control Cabinet can receive 480V from the BESS power stage after startup, such that it can supply auxiliary control power to all components of the system beyond what is protected by the internal UPS.

7.2.1 Basic Standalone BESS Operation as a Local User

In this example, a Local User is controlling the BESS to startup grid disconnected in grid-forming mode. The following are suggested steps for proper startup. The procedure will be described for using both the Local WebApp and Local Modbus Interface side by side, as the internal parameters are exactly the same.

Startup Procedure:

1. Verify auxiliary power is present on both the inverter cabinet and all battery cabinets. Auxiliary power will be provided for a finite amount of time from the Control Cabinet's internal UPS.
   a. Battery Cabinets
      i. The green LV LED will illuminate on the front panel of each battery cabinet if auxiliary power is properly applied.
   b. Inverter Cabinet
      i. The blue POWER LED will illuminate on the front panel of the inverter cabinet if auxiliary power is properly applied.

Figure 73. Inverter and Battery Auxiliary Power Indicator Locations

2. Ensure that the Functional STOP (F-STOP) has been released on the inverter cabinet.

Figure 74. Inverter F-Stop Location

3. Navigate to one of the Local User Interfaces and verify communication to the GSEC controller.
   a. Local WebApp – connected via ethernet to the customer port, open a web browser and navigate to http://XXX.XXX.XXX.XXX/webapp
   b. Cloud WebApp – open an internet browser and navigate to https://brightlayer-rm-r2-perf.eaton.com/eaton/login (This will change)
   c. Local Modbus Interface – connected via ethernet to the customer port, establish a Modbus Client connection to IP: XXX.XXX.XXX.XXX, Device ID: 1

NOTICE

Consult Eaton Service if you are unable to establish communication via one of the Local User Interfaces.

4. From the user interface, clear any faults.
   a. If the BESS control power was just applied, there may be a few Power-On-Reset type faults. Clear the faults utilizing the command in the table below.

Table 44. Local User Startup – Clear Faults and Warnings

Parameter Name	Local WebApp Parameter	Local Modbus Map Register	Value
CMD_ ClearFaultWarningCmd	[Control/Timeline] Clear Button	4003	[9] Clear All BESS Faults and Warnings

5. Verify fault clearing through indicators. See Figure 73 for details.
6. From the user interface, verify the BESS Offline state.
   a. Read the BESS State parameter to ensure that the BESS is in the Offline state. The BESS may only be commanded to start when in the Offline state.

Table 45. Local User Startup – BESS State Verification Before Startup

Parameter Name	Local WebApp Parameter	Local Modbus Map Register	Value
STATE_BESSState	[Control/Meters] BESS State	5002	[2] Offline

7. From the user interface, command a Start BESS Off-Grid (Goto Forming).
   a. From the Offline state, command an Off-Grid BESS start from either interface according to the table below. Note that the local grid must be unavailable in order to start in grid-forming (grid-disconnected) mode.

Table 46. Local User Startup – Command Off-Grid Start

Parameter Name	Local WebApp Parameter	Local Modbus Map Register	Value
CMD_BESSStateCmd	[Control] Start Off-Grid Button	4002	[4] Goto Forming

8. Verify high voltage and run indicators.
   a. Battery Cabinets
      i. The red HV LED will illuminate on the front panel of each battery cabinet when the high voltage DC relay has closed in each cabinet. This establishes the HVDC connection to the inverter stage.
   b. Inverter Cabinet
      i. Upon successful startup of the inverter stage, the green RUN LED will illuminate on the front panel of the inverter cabinet.

Figure 75. Inverter and Battery Run Indicator Locations

9. From the user interface, verify the BESS Grid-Forming state.
   a. Read the BESS State parameter to ensure that the BESS has properly reached the Grid-Forming state. Energy Services will be disabled.

Table 47. Local User Startup – BESS State Verification After Startup

Parameter Name	Local WebApp Parameter	Local Modbus Map Register	Value
STATE_BESSState	[Control/Meters] BESS State	5002	[5] BESS Grid Forming
STATE_EnergyService	[Control/Meters] Energy Service	5007	[0] Energy Services Disabled

NOTICE

If the system is configured with Automatic Grid-Forming Control, the system will transition to the Autonomous state as well upon startup. Upon return of the utility for this type of configuration, the BESS will automatically synchronize to the utility, close the MX2 islanding breaker, and transition back to the BESS Grid Following state, starting/resuming Energy Services.

7.2.2 Basic Microgrid BESS Operation as a Remote User

In this example, a Remote User is controlling the BESS to startup grid disconnected in grid-forming mode. The procedure will be described for Remote Modbus Interface and necessary registers.

Startup Procedure:

1. Verify auxiliary power is present on both the inverter cabinet and all battery cabinets. Auxiliary power will be provided for a finite amount of time from the Control Cabinet's internal UPS.
   a. Battery Cabinets
      i. The green LV LED will illuminate on the front panel of each battery cabinet if auxiliary power is properly applied.
   b. Inverter Cabinet
      i. The blue POWER LED will illuminate on the front panel of the inverter cabinet if auxiliary power is properly applied. See Figure 73 for details.
2. Ensure that the Functional STOP (F-STOP) has been released on the inverter cabinet. See Figure 74 for details.
3. Verify communication to the GSEC controller via the Remote Modbus Interface
   a. Remote Modbus Interface – connected via ethernet to the customer port, establish a Modbus Client connection to IP: XXX.XXX.XXX.XXX, Device ID: 2

NOTICE

Consult Eaton Service if you are unable to establish communication via the Remote Modbus Interface.

4. From the modbus interface, if not already active, initiate Remote User Mode.
   a. As indicated in Section 6.5, there are two settings which must be properly set to allow transition to Remote User Mode. From the Local User Interfaces, the LOCAL_SET_RemoteUserAllowed setting must be configured to allow Remote User Mode. Consult the previous sections to enable this setting properly.
   b. Given that the Local User configuration is set properly, request transition to Remote User Mode using the REMOTE_SET_LocalRemoteMode parameter as indicated in the table below. The transition can be verified by monitoring the associated state register.

Table 48. Remote User Startup – Initiate Remote User Mode

Parameter Name	Remote Modbus Map Register	Value
REMOTE_SET_LocalRemoteMode	1193	[1] Remote User Selected
STATE_UserMode	5005	[1] Remote User Mode

5. From the modbus interface, if not already active, initiate and sustain the controller heartbeat.
   a. In Remote User Mode, the GSEC controller requires a heartbeat from any northbound controller. To avoid a fault as result of loss of heartbeat, the northbound controller must write to the following register within every second, incrementing from 0-255 each interval.

Table 49. Remote User Startup – Initiate and Sustain Heartbeat

Parameter Name	Remote Modbus Map Register	Value
HB_NorthboundHeartbeat	1196	0-255, incrementing once per second

6. From the modbus interface, clear any present faults.

a. If the BESS control power was just applied or heartbeat just started, there may be a few faults present. Clear the faults utilizing the command in the table below.

Table 50. Remote User Startup – Clear Faults and Warnings

Parameter Name	Remote Modbus Map Register	Value
CMD_ClearFaultWarningCmd	4003	[9] Clear All BESS Faults and Warnings

7. Verify fault clearing through indicators. See Figure 73 for details.
8. From the modbus interface, verify the BESS Offline State.
   a. Read the BESS State parameter to ensure that the BESS is in the Offline state. The BESS may only be commanded to start when in the Offline state.

Table 51. Remote User Startup – BESS State Verification Before Startup

Parameter Name	Remote Modbus Map Register	Value
STATE_BESSState	5002	[2] Offline

9. From the modbus interface, command a Start BESS Off-Grid (Go to Forming).
   a. From the Offline state, command an Off-Grid BESS start. Note that the local grid must be unavailable in order to start in grid-forming (grid-disconnected) mode.

Table 52. Remote User Startup – Command Off-Grid Start

Parameter Name	Remote Modbus Map Register	Value
CMD_BESSStateCmd	4002	[4] Goto Forming

10. Verify high voltage and run indicators.
    a. Battery Cabinets
       i. The red HV LED will illuminate on the front panel of each battery cabinet when the high voltage DC relay has closed in each cabinet. This establishes the HVDC connection to the inverter stage.
    b. Inverter Cabinet
       i. Upon successful startup of the inverter stage, the green RUN LED will illuminate on the front panel of the inverter cabinet. See Figure 75 for details.

11. From the modbus interface, verify the BESS Grid-Forming state.
    a. Read the BESS State parameter to ensure that the BESS has properly reached the Grid-Forming state.

Table 53. Remote User Startup – BESS State Verification After Startup

Parameter Name	Remote Modbus Map Register	Value
STATE_BESSState	5002	[5] BESS Grid Forming

NOTICE

If the system is configured with Automatic Grid-Forming Control, the system will transition to the Autonomous state as well upon startup. Upon return of the utility for this type of configuration, the BESS will automatically synchronize to the utility, close the MX2 islanding breaker, and transition back to the BESS Grid Following state, starting/resuming Energy Services.

If the system is configured with Manual Grid-Forming Control, the system will remain in the BESS Grid Forming State until commanded by the Remote User to go to another state, such as BESS Grid Following. The Remote User can utilize the Remote Voltage Synchronize command and status registers to perform closed transitions across and islanding breaker. In the Manual Grid-Forming Control configuration, to remain flexible for all transition requirements, the BESS will not verify Synchronization to the Remote Voltage before attempting to switch between forming and following. The Remote User must ensure proper synchronization checks are done before attempting to command a Goto Following state change.

7.3 Shutdown/Decommissioning

The Eaton xStorage 250-1000 may be shut down for maintenance or testing purposes.

Contact your Eaton service representative if the system must be shut down for an extended period.

NOTICE

The battery racks must be periodically charged and balanced in the event of an extended shutdown and must be stored within proper temperature and humidity ranges. Do not exceed 6 months of storage without charging the battery rack to 50% SOC. Additional information may be requested by contacting your Eaton service representative.

Contact your local recycling or hazardous waste center for information on proper disposal of the used xStorage 250-1000 and the battery system. Additional information may be requested by contacting your Eaton service representative.

7.4 Startup After Extended Blackout

The xStorage 250-1000 will walk through shut down procedure during an extended blackout when battery energy capacity is depleted to the minimum SOC required for island conditions. During the shutdown, no regulation of component internal temperatures will be present.

Upon utility return, if the automatic backup power option is selected and components are installed, the xStorage 250-1000 will automatically close the upstream breaker MX2 and energize control and cooling power components. The xStorage 250-1000 will require an Eaton service representative to clear fault conditions and ensure the system safely returns to energy services after an extended blackout.

Upon utility return, if the manual backup power option or no backup power is selected, the xStorage 250-1000 will require an Eaton service representative to close the upstream breaker MX2 and ensure the system safely returns to energy services after an extended blackout.

7.5 Emergency Power Off

The standard xStorage 250-1000 configuration comes with a functional stop button on the inverter. If the functional stop button is triggered during operation, the inverter will fault, ceasing power commands and opening the internal contactors. The inverter fault will immediately trigger the GSEC shutdown sequence, opening all battery rack HV relays and disconnecting the system from the point of common coupling (PCC). This will cut all power to and from the xStorage 250-1000, inclusive of control and cooling power to components, but voltages may still be present upstream of the system and on the UPS backup.

To restart the xStorage 250-1000 after an EPO scenario, it is necessary for authorized Eaton service personnel to inspect the unit and ensure the system safely returns to energy services.

If an EPO is triggered, it is suggested to contact Eaton service quickly to limit downtime and restore operation of the environmental control systems.

7.6 Fire Procedure

Introduction

The xStorage 250-1000 battery modules store electric energy in lithium-ion battery modules and transmits DC power up to 1500 V and the inverter transmits AC power up to 480 V. Therefore, the xStorage 250-1000 is susceptible to Class B and Class C fires.

The Safety Data Sheet for the installed batteries is included as an appendix to this manual, see *12.1 Battery Safety Data Sheets*.

The electrical equipment of the xStorage 250-1000 has been tested to ensure that it does not pose a significant threat to the public.

In the event of smoke, gas, or fire detection, emergency alarms are automatically sent to the system owner, service organization, and predefined local emergency response personnel. Local area visual indication is provided by the fire alarm horn and strobe mounted on the exterior of the control cabinet.

This procedure is intended to be executed as a joint operation between the system owner, service organization, and emergency response personnel.

Initial Conditions

At least one of the following indications is present:

1. xStorage 250-1000 alarms via the remote customer interface indicating critical battery failure, smoke, gas, or extreme temperature detection.
2. xStorage 250-1000 fire alarm and strobe located on the exterior of the control cabinet are alarming.
3. Smoke or flames are emitting from the xStorage 250-1000.

Precautions

1. The cabinet contains hazardous electrical energy.

⚠WARNING

Hazardous energy may remain in the batteries even after the main AC breaker is open.

2. If the fire has damaged the lithium-ion batteries, flammable gas may be generated.
3. Any personnel approaching the cabinet should don full PPE and self-contained breathing apparatus.

WARNING

Hydrofluoric acid may form if the battery electrolyte comes into contact with water.

4. Do not utilize piercing nozzles or long penetrating irons to fight the fire, as these may damage the lithium-ion batteries and release flammable gas.

Procedure

1. Contact the local fire department.
2. Contact the system owner and service organization.
3. Evacuate the immediate area of all nonessential personnel.
4. Disconnect utility power to the system by opening the main AC breaker.
5. Using a portable gas meter, periodically sample the air surrounding the cabinet for the presence of flammable gases.
6. Extinguish the fire using cold water and dry powder.
   a. The application of firefighting dry powders or carbon dioxide extinguishers may eliminate visible flames on the batteries, but do not provide sufficient cooling to interrupt thermal runaway.
   b. If the battery wiring harness is smoking or on fire, use dry powders or carbon dioxide extinguishers.
   c. If a battery cell or module has experienced thermal runaway and rupture, cool the battery as needed by spraying it with water.
7. The system is safe to turn over to the owner for repair or disposal once the temperature of the runaway battery does not increase above ambient when cooling is paused.

7.7 External Warning Communication System

The xStorage 250-1000 contains an External Warning Communication System (EWCS) to automatically notify the system owner, local personnel, and predefined local emergency response personnel in the event of a critical battery failure, smoke, gas, or extreme temperature detection.

NOTICE

Local emergency response contact(s) must be defined in the remote customer interface to enable automatic delivery of critical alarms.

The EWCS utilizes Eaton's Remote Monitoring™ network and secure cellular connection to monitor the xStorage 250-1000. The EWCS being activated will automatically disconnect the xStorage 250-1000 from the PCC and shut down the inverter and batteries.

The EWCS supports critical alarming communication for 5 hours upon activation. Local fire strobe and horn alarming will persist for up to 24 hours or until local fire authority clear local alarming.

See *7.6 Fire Procedure* for detailed conditions and procedures in the event of a critical battery failure or fire.

Figure 76. EWCS Local Alarm and Horn Location

Chapter 8 Schematics and Site Plans

8.1 Schematics

The system schematic drawings in this section show the simplified internal structure of the xStorage 250-1000.

Figure 77. P-110001123, xStorage 250–1000 Energy Storage System — Oneline — Page 1

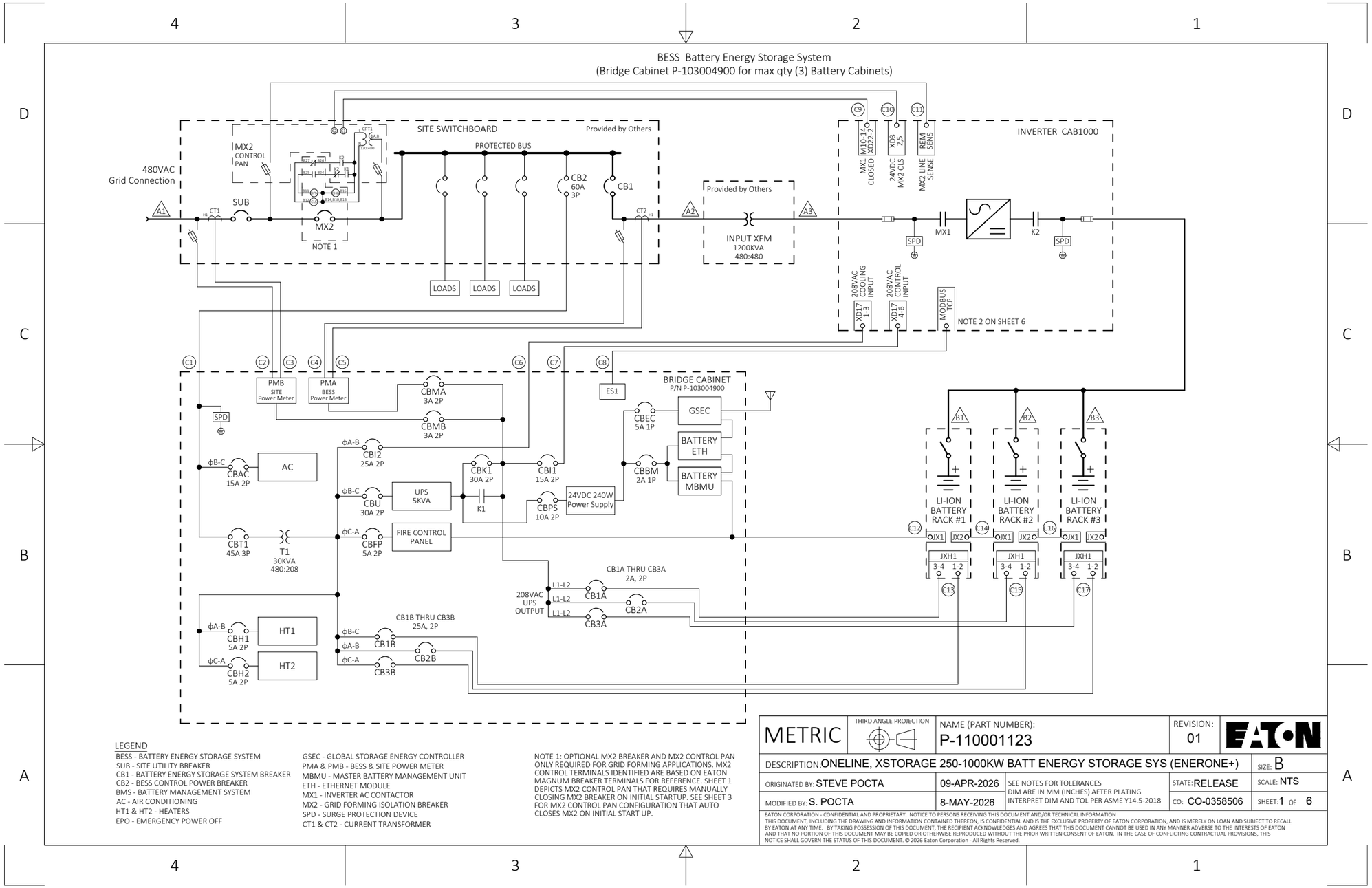

LEGEND

BESS - BATTERY ENERGY STORAGE SYSTEM
SUB - SITE UTILITY BREAKER
CB1 - BATTERY ENERGY STORAGE SYSTEM BREAKER
CB2 - BESS CONTROL POWER BREAKER
BMS - BATTERY MANAGEMENT SYSTEM
AC - AIR CONDITIONING
HT1 & HT2 - HEATERS
EPO - EMERGENCY POWER OFF

GSEC - GLOBAL STORAGE ENERGY CONTROLLER
PMA & PMB - BESS & SITE POWER METER
MBMU - MASTER BATTERY MANAGEMENT UNIT
ETH - ETHERNET MODULE
MX1 - INVERTER AC CONTACTOR
MX2 - GRID FORMING ISOLATION BREAKER
SPD - SURGE PROTECTION DEVICE
CT1 & CT2 - CURRENT TRANSFORMER

NOTE 1: OPTIONAL MX2 BREAKER AND MX2 CONTROL PAN ONLY REQUIRED FOR GRID FORMING APPLICATIONS. MX2 CONTROL TERMINALS IDENTIFIED ARE BASED ON EATON MAGNUM BREAKER TERMINALS FOR REFERENCE. SHEET 1 DEPICTS MX2 CONTROL PAN THAT REQUIRES MANUALLY CLOSING MX2 BREAKER ON INITIAL STARTUP. SEE SHEET 3 FOR MX2 CONTROL PAN CONFIGURATION THAT AUTO CLOSES MX2 ON INITIAL START UP.

Figure 78. P-110001123, xStorage 250–1000 Energy Storage System — Oneline — Page 2

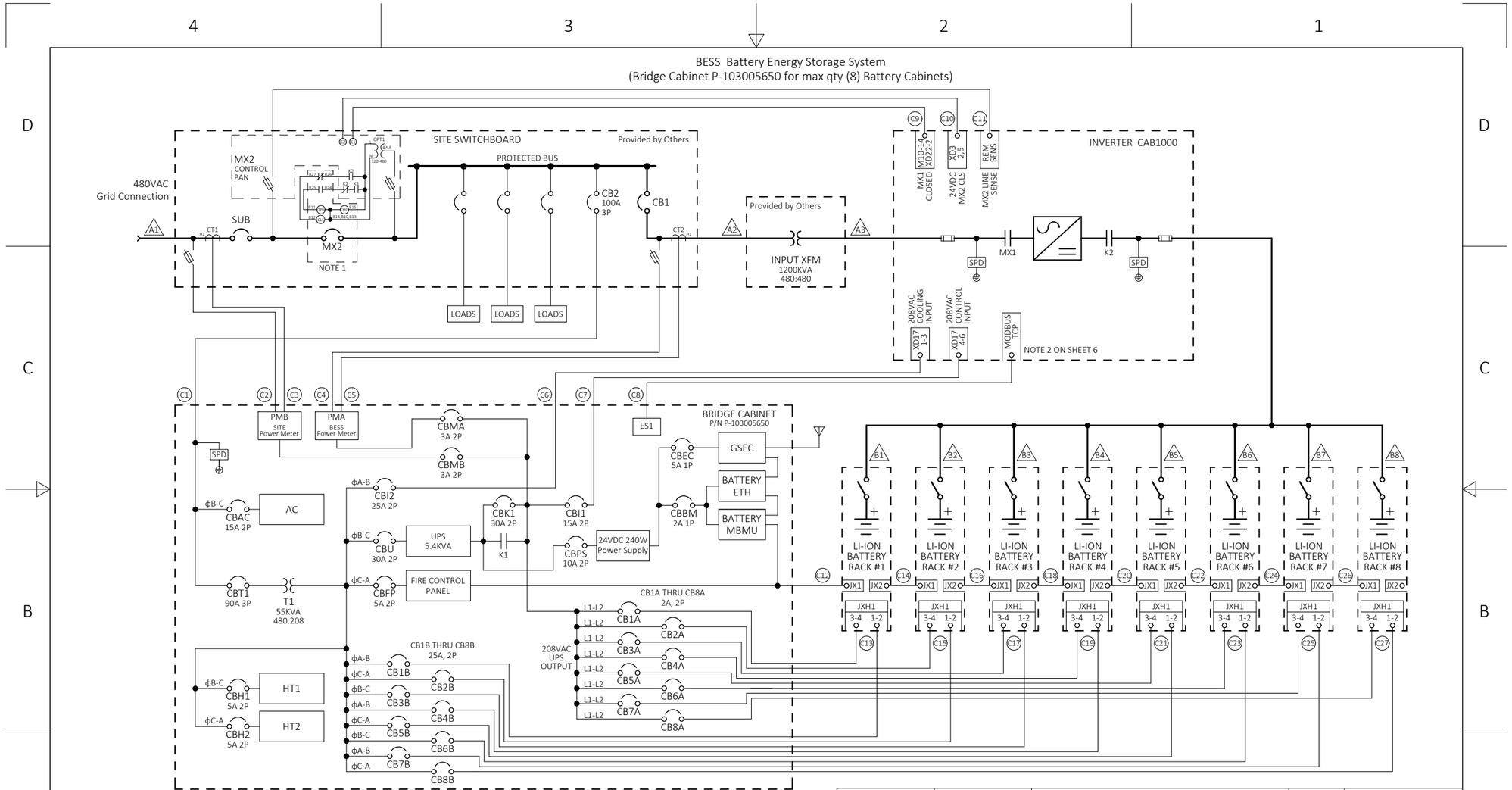

LEGEND

BESS - BATTERY ENERGY STORAGE SYSTEM
SUB - SITE UTILITY BREAKER
CB1 - BATTERY ENERGY STORAGE SYSTEM BREAKER
CB2 - BESS CONTROL POWER BREAKER
BMS - BATTERY MANAGEMENT SYSTEM
AC - AIR CONDITIONING
HT1 & HT2 - HEATERS
EPO - EMERGENCY POWER OFF

GSEC - GLOBAL STORAGE ENERGY CONTROLLER
PMA & PMB - BESS & SITE POWER METER
MBMU - MASTER BATTERY MANAGEMENT UNIT
ETH - ETHERNET MODULE
MX1 - INVERTER AC CONTACTOR
MX2 - GRID FORMING ISOLATION BREAKER
SPD - SURGE PROTECTION DEVICE
CT1 & CT2 - CURRENT TRANSFORMER

NOTE 1: OPTIONAL MX2 BREAKER AND MX2 CONTROL PAN ONLY REQUIRED FOR GRID FORMING APPLICATIONS. MX2 CONTROL TERMINALS IDENTIFIED ARE BASED ON EATON MAGNUM BREAKER TERMINALS FOR REFERENCE. SHEET 2 DEPICTS MX2 CONTROL PAN THAT REQUIRES MANUALLY CLOSING MX2 BREAKER ON INITIAL STARTUP. SEE SHEET 3 FOR MX2 CONTROL PAN CONFIGURATION THAT AUTO CLOSES MX2 ON INITIAL START UP.

METRIC	THIRD ANGLE PROJECTION	NAME (PART NUMBER): P-110001123	REVISION: 01	EATON
DESCRIPTION: ONELINE, XSTORAGE 250-1000KW BATT ENERGY STORAGE SYS (ENERONE+)				SIZE: B
ORIGINATED BY: STEVE POCTA	09-APR-2026	SEE NOTES FOR TOLERANCES DIM ARE IN MM (INCHES) AFTER PLATING INTERPRET DIM AND TOL PER ASME Y14.5-2018	STATE: RELEASE	SCALE: NTS
MODIFIED BY: S. POCTA	8-MAY-2026		CO: CO-0358506	SHEET: 2 OF 6

EATON CORPORATION - CONFIDENTIAL AND PROPRIETARY. NOTICE TO PERSONS RECEIVING THIS DOCUMENT AND/OR TECHNICAL INFORMATION THIS DOCUMENT, INCLUDING THE DRAWING AND INFORMATION CONTAINED THEREON, IS CONFIDENTIAL AND IS THE EXCLUSIVE PROPERTY OF EATON CORPORATION, AND IS MERELY ON LOAN AND SUBJECT TO RECALL BY EATON AT ANY TIME. BY TAKING POSSESSION OF THIS DOCUMENT, THE RECIPIENT ACKNOWLEDGES AND AGREES THAT THIS DOCUMENT CANNOT BE USED IN ANY MANNER ADVERSE TO THE INTERESTS OF EATON AND THAT NO PORTION OF THIS DOCUMENT MAY BE COPIED OR OTHERWISE REPRODUCED WITHOUT THE PRIOR WRITTEN CONSENT OF EATON. IN THE CASE OF CONFLICTING CONTRACTUAL PROVISIONS, THIS NOTICE SHALL GOVERN THE STATUS OF THIS DOCUMENT. © 2026 Eaton Corporation - All Rights Reserved.

Figure 79. P-110001123, xStorage 250–1000 Energy Storage System — Oneline — Page 3

TABLE A POWER WIRING & POWER METER CT RATIO

POINT OF MEASURE	POINT OF MEASURE	NOMINAL VOLTS	NOMINAL AMPS	BESS (KW)	CT RATIO
A	AC INPUT/OUTPUT TO BESS (3) PHASES, (1) GROUND	480 VAC	1203	1000	1500/5
			1143	950	1500/5
			1083	900	1500/5
			1023	850	1500/5
			963	800	1200/5
			903	750	1200/5
			842	700	1200/5
			782	650	1000/5
			722	600	1000/5
			662	550	1000/5
			602	500	800/5
			542	450	800/5
			482	4000	800/5
			421	350	500/5
			361	300	500/5
			301	250	500/5
B	DC INPUT/OUTPUT TO INVERTER FROM BATTERY CABINETS (1) POSITIVE, (1) NEGATIVE, (1) GROUND	1331.2 VDC (8 module cabinets)	30C AMB = 263 50C AMB = 226 (Note A)	250 thru 1000	

Note A) Max per battery cabinet DC Amps based on 3/0 XLPE 105C direct burial cable ampacity according to NEC tables 690.31(A)(3)(1) and 690.31(A)(3)(2). AMB = Ambient Temperature.
Burial of cable/conduit maybe required to meet 30C ambient temperature.

TABLE D SYSTEM BREAKER TABLE

SYSTEM (KW)	BREAKER	CURRENT RATING (A) 100% RATED	CURRENT RATING (A) 80% RATED
1000	SUB, CB1, MX2*	1600	1600
800	SUB, CB1, MX2*	1000	1200
700	SUB, CB1, MX2*	1000	1200
500	SUB, CB1, MX2*	700	800
350	SUB, CB1, MX2*	500	600
250	SUB, CB1, MX2*	350	400

BRIDGE CABINET P/N	BREAKER	CURRENT RATING (A) 100% RATED	CURRENT RATING (A) 80% RATED
P-103004900 (3 BATT MAX)	CB2	50	60
P-103005650 (8 BATT MAX)	CB2	80	100

ALL BREAKERS REQUIRE:
AUX CONTACTS = 2A2B
ALARM CONTACTS = 1A1B

* OPTIONAL MX2 ONLY REQUIRED FOR GRID FORMING APPLICATIONS. BREAKER REQUIRES:
120V SPRING CHARGE
120V SPRING RELEASE (CLOSE OPERATION)
120V SHUNT TRIP (OPEN OPERATION)

TABLE F INPUT TRANSFORMER TABLE

SYSTEM POWER (KW)	TRANSFORMER RATING (KVA)
850 - 1000	1200
700 - 800	1000
450 - 650	750
300 - 400	500
250	300

INPUT TRANSFORMER REQUIREMENTS:
480 Y 277 PRI. - 480V DELTA SEC.
ISOLATION TRANSFORMER
TAPS 2 @ +2.5%, 2 @ -2.5%
150C RISE
ELECTROSTATIC SHIELD

DELTA SECONDARY FACES INVERTER. SEE INVERTER MANUAL FOR ADDITIONAL TRANSFORMER REQUIREMENTS.

TABLE B BATTERY CABINETS

SYSTEM (KW)	MIN QTY BATT CAB 30C AMB	MIN QTY BATT CAB 50C AMB
1000	3	4
950	3	4
900	3	3
750	3	3
650	2	3
400	2	2
350	1	2
250	1	1

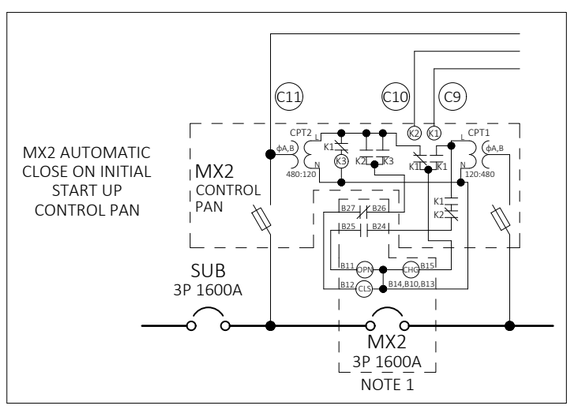

NOTE 1: OPTIONAL MX2 BREAKER AND MX2 CONTROL PAN ONLY REQUIRED FOR GRID FORMING APPLICATIONS. MX2 CONTROL TERMINALS IDENTIFIED ARE BASED ON EATON MAGNUM BREAKER TERMINALS FOR REFERENCE. SHEET 1 AND 2 DEPICTS MX2 CONTROL PAN THAT REQUIRES MANUALLY CLOSING MX2 BREAKER ON INITIAL STARTUP. CIRCUIT TO LEFT DEPICTS MX2 CONTROL PAN CONFIGURATION THAT AUTO CLOSES MX2 ON INITIAL START UP.

METRIC	THIRD ANGLE PROJECTION	NAME (PART NUMBER): P-110001123	REVISION: 01	EATON
DESCRIPTION: ONELINE, XSTORAGE 250-1000KW BATT ENERGY STORAGE SYS (ENERONE+)				SIZE: B
ORIGINATED BY: STEVE POCTA	09-APR-2026	SEE NOTES FOR TOLERANCES DIM ARE IN MM (INCHES) AFTER PLATING INTERPRET DIM AND TOL PER ASME Y14.5-2018	STATE: RELEASE	SCALE: NTS
MODIFIED BY: S. POCTA	8-MAY-2026		CO: CO-0358506	SHEET: 3 OF 6

EATON CORPORATION - CONFIDENTIAL AND PROPRIETARY. NOTICE TO PERSONS RECEIVING THIS DOCUMENT AND/OR TECHNICAL INFORMATION
THIS DOCUMENT, INCLUDING THE DRAWING AND INFORMATION CONTAINED THEREON, IS CONFIDENTIAL AND IS THE EXCLUSIVE PROPERTY OF EATON CORPORATION, AND IS MERELY ON LOAN AND SUBJECT TO RECALL BY EATON AT ANY TIME. BY TAKING POSSESSION OF THIS DOCUMENT, THE RECIPIENT ACKNOWLEDGES AND AGREES THAT THIS DOCUMENT CANNOT BE USED IN ANY MANNER ADVERSE TO THE INTERESTS OF EATON AND THAT NO PORTION OF THIS DOCUMENT MAY BE COPIED OR OTHERWISE REPRODUCED WITHOUT THE PRIOR WRITTEN CONSENT OF EATON. IN THE CASE OF CONFLICTING CONTRACTUAL PROVISIONS, THIS NOTICE SHALL GOVERN THE STATUS OF THIS DOCUMENT. © 2026 Eaton Corporation - All Rights Reserved.

Figure 80. P-110001123, xStorage 250–1000 Energy Storage System — Oneline — Page 4

LIST OF CONTROL WIRING TABLES		
TABLE #	DESCRIPTION	SHEET
C1	CONTROL WIRING BETWEEN BRIDGE CABINET (P-103004900 OR P-103005650), INVERTER CAB1000 AND SITE SWITCHBOARD	4
C2	CONTROL WIRING BETWEEN BRIDGE CABINET (P-103004900) AND ENERONE+ BATTERIES (MAX 3 CABINETS)	4
C3	CONTROL WIRING BETWEEN BRIDGE CABINET (P-103005650) AND ENERONE+ BATTERIES (MAX 8 CABINETS)	5

TABLE C1 CONTROL WIRING XSTORAGE SYSTEM (BRIDGE CABINET P-103004900 or P-103005650)

CABLE #	CONNECTION	FROM	TO	NOMINAL VOLTAGE	CABLE QTY/AWG (90C, THHN)	EMT CONDUIT SIZE (in.)	CONDUIT #
C2	SITE METER (PMB) PT	BRIDGE CABINET: TB2-4, TB2-5, TB2-6	SITE SWITCHBOARD: SUB LINE SIDE ϕA-V, ϕB-V, ϕC-V	480 VAC	3/C #14	0.75	2
C3	SITE METER (PMB) CT	BRIDGE CABINET: TB2-15, TB2-16, TB2-17, TB2-18, TB2-19, TB2-20	SITE SWITCHBOARD: CT1 ϕA-X1, ϕA-X2, ϕB-X1, ϕB-X2, ϕC-X1, ϕC-X2	480 VAC	6/C #14		
C4	BESS METER (PMA) PT	BRIDGE CABINET: TB2-1, TB2-2, TB2-3	SITE SWITCHBOARD: CB1 LOAD SIDE ϕA-V, ϕB-V, ϕC-V	480 VAC	3/C #14	0.75	3
C5	BESS METER (PMA) CT	BRIDGE CABINET: TB2-8, TB2-9, TB2-10, TB2-11, TB2-12, TB2-13	SITE SWITCHBOARD: CT2 ϕA-X1, ϕA-X2, ϕB-X1, ϕB-X2, ϕC-X1, ϕC-X2	480 VAC	6/C #14		
C8	INVERTER MODBUS TCP (SEE NOTE 2 ON SHEET 6)	BRIDGE CABINET: ES1-4	INVERTER: MODBUS TCP RJ45 PORT	24 VDC	SHIELDED CAT6	0.50	5
C9 *	MX1 CLOSED	INVERTER: M10-14, XD22-2	SITE SWITCHBOARD: MX2 CONTROL PAN MX1 CLOSED 24V, COM	24 VDC	2/C #18	0.50	6
C10 *	MX2 CLOSE	INVERTER CAB1000: XD3-2, XD3-5	SITE SWITCHBOARD: MX2 CONTROL PAN MX2 CLOSE 24V, COM	24 VDC	2/C #18		
C11 *	MX2 LINE VOLTAGE SENSE	INVERTER CAB1000: REMOTE SENSE L1, L2, L3	SITE SWITCHBOARD: MX2 LINE SIDE ϕA-V, ϕB-V, ϕC-V	480 VAC	3/C #18		

*CABLE # C9, C10, C11 ONLY REQUIRED IN GRID FORMING APPLICATIONS. C9 & C10 TO BE 6OOV RATED IF PLACED IN SINGLE CONDUIT WITH C11. ADD #18 WIRE JUMPER FROM INVERTER XD22-1 TO M10-13 FOR GRID FORMING APPLICATIONS.

TABLE C2 CONTROL WIRING XSTORAGE BRIDGE CABINET TO BATTERY CABINETS (BRIDGE CABINET P-103004900 WITH MAX QTY 3 ENERONE+ BATTERY CABINETS)

CABLE #	CONNECTION	FROM	TO	NOMINAL VOLTAGE	CABLE QTY/AWG (90C, THHN)	EMT CONDUIT SIZE (in.)	CONDUIT #
C1	BRIDGE CABINET INPUT POWER	BRIDGE CABINET: DB1, DB2, DB3, GND	SITE SWITCHBOARD: CB2-2, CB2-4, CB2-6, GND	480 VAC	4/C #6	1.25	1
C6	INVERTER COOLING POWER	BRIDGE CABINET: TB1-4, TB1-5, TB1-6	INVERTER: XD17-1, XD17-2, XD17-3	208 VAC	3/C #12	0.50	4
C7	INVERTER CONTROL POWER	BRIDGE CABINET: TB1-1, TB1-2, TB1-3	INVERTER: XD17-4, XD17-5, XD17-6	208 VAC	3/C #12		
C12	BMS & FIRE PANEL COMMUNICATION	BRIDGE CABINET: TB3-31, TB3-32	BATTERY CABINET #1: JX1-1, JX1-2	24 VDC	1/#20 TWISTED PAIR	0.75	7
		BRIDGE CABINET: TB3-38, TB3-39, TB3-40	BATTERY CABINET #1: JX1-9, JX1-10, SHIELD	24 VDC	1/#20 TWISTED PAIR SHIELDED		
C13	BATTERY CABINET 1 AUX POWER	BRIDGE CABINET: TB1-8, TB1-9, TB1-11, TB1-12	BATTERY CABINET #1: JXH1-3, JXH1-4, JXH1-1, JXH1-2	208 VAC	4/C #10	0.50	8
C14	BATTERY CABINET 1 TO CABINET 2 BMS & FIRE PANEL COMMUNICATION	BATTERY CABINET #1: JX2-1, JX2-2	BATTERY CABINET #2: JX1-1, JX1-2	24 VDC	1/#20 TWISTED PAIR	0.75	9
		BATTERY CABINET #1: JX2-9, JX2-10, SHIELD	BATTERY CABINET #2: JX1-9, JX1-10, SHIELD	24 VDC	1/#20 TWISTED PAIR SHIELDED		
C15	BATTERY CABINET 2 AUX POWER	BRIDGE CABINET: TB1-14, TB1-15, TB1-17, TB1-18	BATTERY CABINET #2: JXH1-3, JXH1-4, JXH1-1, JXH1-2	208 VAC	4/C #10	0.50	10
C16	BATTERY CABINET 2 TO CABINET 3 BMS & FIRE PANEL COMMUNICATION	BATTERY CABINET #2: JX2-1, JX2-2	BATTERY CABINET #3: JX1-1, JX1-2	24 VDC	1/#20 TWISTED PAIR	0.75	11
		BATTERY CABINET #2: JX2-9, JX2-10, SHIELD	BATTERY CABINET #3: JX1-9, JX1-10, SHIELD	24 VDC	1/#20 TWISTED PAIR SHIELDED		
C17	BATTERY CABINET 3 AUX POWER	BRIDGE CABINET: TB1-20, TB1-21, TB1-23, TB1-24	BATTERY CABINET #3: JXH1-3, JXH1-4, JXH1-1, JXH1-2	208 VAC	4/C #10	0.50	12

METRIC	THIRD ANGLE PROJECTION	NAME (PART NUMBER): P-110001123	REVISION: 01	EATON
DESCRIPTION: ONELINE, XSTORAGE 250-1000KW BATT ENERGY STORAGE SYS (ENERONE+)				SIZE: B
ORIGINATED BY: STEVE POCTA	09-APR-2026	SEE NOTES FOR TOLERANCES DIM ARE IN MM (INCHES) AFTER PLATING INTERPRET DIM AND TOL PER ASME Y14.5-2018	STATE: RELEASE	SCALE: NTS
MODIFIED BY: S. POCTA	8-MAY-2026		CO: CO-0358506	SHEET: 4 OF 6

EATON CORPORATION - CONFIDENTIAL AND PROPRIETARY. NOTICE TO PERSONS RECEIVING THIS DOCUMENT AND/OR TECHNICAL INFORMATION
THIS DOCUMENT, INCLUDING THE DRAWING AND INFORMATION CONTAINED THEREON, IS CONFIDENTIAL AND IS THE EXCLUSIVE PROPERTY OF EATON CORPORATION, AND IS MERELY ON LOAN AND SUBJECT TO RECALL BY EATON AT ANY TIME. BY TAKING POSSESSION OF THIS DOCUMENT, THE RECIPIENT ACKNOWLEDGES AND AGREES THAT THIS DOCUMENT CANNOT BE USED IN ANY MANNER ADVERSE TO THE INTERESTS OF EATON AND THAT NO PORTION OF THIS DOCUMENT MAY BE COPIED OR OTHERWISE REPRODUCED WITHOUT THE PRIOR WRITTEN CONSENT OF EATON. IN THE CASE OF CONFLICTING CONTRACTUAL PROVISIONS, THIS NOTICE SHALL GOVERN THE STATUS OF THIS DOCUMENT. © 2026 Eaton Corporation - All Rights Reserved.

Figure 81. P-110001123, xStorage 250–1000 Energy Storage System — Oneline — Page 5

TABLE C3 CONTROL WIRING XSTORAGE BRIDGE CABINET TO BATTERY CABINETS (BRIDGE CABINET P-103005650 WITH MAX 8 ENERONE+ BATTERY CABINETS)

CABLE #	CONNECTION	FROM	TO	NOMINAL VOLTAGE	CABLE QTY/AWG (90C, THHN)	EMT CONDUIT SIZE (in.)	CONDUIT #
C1	BRIDGE CABINET INPUT POWER	BRIDGE CABINET: DB1, DB2, DB3, GND	SITE SWITCHBOARD: CB2-2, CB2-4, CB2-6, GND	480 VAC	4/C #2	1.25	1
C6	INVERTER COOLING POWER	BRIDGE CABINET: TB1-3, TB1-4, TB1-42	INVERTER: XD17-1, XD17-2, XD17-3	208 VAC	3/C #12	0.50	4
C7	INVERTER CONTROL POWER	BRIDGE CABINET: TB1-1, TB1-2, TB1-41	INVERTER: XD17-4, XD17-5, XD17-6	208 VAC	3/C #12		
C12	BMS & FIRE PANEL COMMUNICATION	BRIDGE CABINET: TB3-31, TB3-32	BATTERY CABINET #1: JX1-1, JX1-2	24 VDC	1/#20 TWISTED PAIR	0.75	7
		BRIDGE CABINET: TB3-38, TB3-39, TB3-40	BATTERY CABINET #1: JX1-9, JX1-10, SHIELD	24 VDC	1/#20 TWISTED PAIR SHIELDED		
C13	BATTERY CABINET 1 AUX POWER	BRIDGE CABINET: TB1-5, TB1-6, TB1-7, TB1-8	BATTERY CABINET #1: JXH1-3, JXH1-4, JXH1-1, JXH1-2	208 VAC	4/C #10	0.50	8
C14	BATTERY CABINET 1 TO CABINET 2 BMS & FIRE PANEL COMMUNICATION	BATTERY CABINET #1: JX2-1, JX2-2	BATTERY CABINET #2: JX1-1, JX1-2	24 VDC	1/#20 TWISTED PAIR	0.75	9
		BATTERY CABINET #1: JX2-9, JX2-10, SHIELD	BATTERY CABINET #2: JX1-9, JX1-10, SHIELD	24 VDC	1/#20 TWISTED PAIR SHIELDED		
C15	BATTERY CABINET 2 AUX POWER	BRIDGE CABINET: TB1-9, TB1-10, TB1-11, TB1-12	BATTERY CABINET #2: JXH1-3, JXH1-4, JXH1-1, JXH1-2	208 VAC	4/C #10	0.50	10
C16	BATTERY CABINET 2 TO CABINET 3 BMS & FIRE PANEL COMMUNICATION	BATTERY CABINET #2: JX2-1, JX2-2	BATTERY CABINET #3: JX1-1, JX1-2	24 VDC	1/#20 TWISTED PAIR	0.75	11
		BATTERY CABINET #2: JX2-9, JX2-10, SHIELD	BATTERY CABINET #3: JX1-9, JX1-10, SHIELD	24 VDC	1/#20 TWISTED PAIR SHIELDED		
C17	BATTERY CABINET 3 AUX POWER	BRIDGE CABINET: TB1-13, TB1-14, TB1-15, TB1-16	BATTERY CABINET #3: JXH1-3, JXH1-4, JXH1-1, JXH1-2	208 VAC	4/C #10	0.50	12
C18	BATTERY CABINET 3 TO CABINET 4 BMS & FIRE PANEL COMMUNICATION	BATTERY CABINET #3: JX2-1, JX2-2	BATTERY CABINET #4: JX1-1, JX1-2	24 VDC	1/#20 TWISTED PAIR	0.75	13
		BATTERY CABINET #3: JX2-9, JX2-10, SHIELD	BATTERY CABINET #4: JX1-9, JX1-10, SHIELD	24 VDC	1/#20 TWISTED PAIR SHIELDED		
C19	BATTERY CABINET 4 AUX POWER	BRIDGE CABINET: TB1-17, TB1-18, TB1-19, TB1-20	BATTERY CABINET #4: JXH1-3, JXH1-4, JXH1-1, JXH1-2	208 VAC	4/C #10	0.50	14
C20	BATTERY CABINET 4 TO CABINET 5 BMS & FIRE PANEL COMMUNICATION	BATTERY CABINET #4: JX2-1, JX2-2	BATTERY CABINET #5: JX1-1, JX1-2	24 VDC	1/#20 TWISTED PAIR	0.75	15
		BATTERY CABINET #4: JX2-9, JX2-10, SHIELD	BATTERY CABINET #5: JX1-9, JX1-10, SHIELD	24 VDC	1/#20 TWISTED PAIR SHIELDED		

TABLE C3 (cont.) CONTROL WIRING XSTORAGE BRIDGE CABINET TO BATTERY CABINETS (BRIDGE CABINET P-103005650 WITH MAX QTY 8 ENERONE+ BATTERY CABINETS)

CABLE #	CONNECTION	FROM	TO	NOMINAL VOLTAGE	CABLE QTY/AWG (90C, THHN)	EMT CONDUIT SIZE (in.)	CONDUIT #
C21	BATTERY CABINET 5 AUX POWER	BRIDGE CABINET: TB1-21, TB1-22, TB1-23, TB1-24	BATTERY CABINET #5: JXH1-3, JXH1-4, JXH1-1, JXH1-2	208 VAC	4/C #10	0.50	16
C22	BATTERY CABINET 5 TO CABINET 6 BMS & FIRE PANEL COMMUNICATION	BATTERY CABINET #5: JX2-1, JX2-2	BATTERY CABINET #6: JX1-1, JX1-2	24 VDC	1/#20 TWISTED PAIR	0.75	17
		BATTERY CABINET #5: JX2-9, JX2-10, SHIELD	BATTERY CABINET #6: JX1-9, JX1-10, SHIELD	24 VDC	1/#20 TWISTED PAIR SHIELDED		
C23	BATTERY CABINET 6 AUX POWER	BRIDGE CABINET: TB1-25, TB1-26, TB1-27, TB1-28	BATTERY CABINET #6: JXH1-3, JXH1-4, JXH1-1, JXH1-2	208 VAC	4/C #10	0.50	18
C24	BATTERY CABINET 6 TO CABINET 7 BMS & FIRE PANEL COMMUNICATION	BATTERY CABINET #6: JX2-1, JX2-2	BATTERY CABINET #7: JX1-1, JX1-2	24 VDC	1/#20 TWISTED PAIR	0.75	19
		BATTERY CABINET #6: JX2-9, JX2-10, SHIELD	BATTERY CABINET #7: JX1-9, JX1-10, SHIELD	24 VDC	1/#20 TWISTED PAIR SHIELDED		
C25	BATTERY CABINET 7 AUX POWER	BRIDGE CABINET: TB1-29, TB1-30, TB1-31, TB1-32	BATTERY CABINET #7: JXH1-3, JXH1-4, JXH1-1, JXH1-2	208 VAC	4/C #10	0.50	20
C26	BATTERY CABINET 7 TO CABINET 8 BMS & FIRE PANEL COMMUNICATION	BATTERY CABINET #7: JX2-1, JX2-2	BATTERY CABINET #8: JX1-1, JX1-2	24 VDC	1/#20 TWISTED PAIR	0.75	21
		BATTERY CABINET #7: JX2-9, JX2-10, SHIELD	BATTERY CABINET #8: JX1-9, JX1-10, SHIELD	24 VDC	1/#20 TWISTED PAIR SHIELDED		
C27	BATTERY CABINET 8 AUX POWER	BRIDGE CABINET: TB1-33, TB1-34, TB1-35, TB1-36	BATTERY CABINET #8: JXH1-3, JXH1-4, JXH1-1, JXH1-2	208 VAC	4/C #10	0.50	22

METRIC	THIRD ANGLE PROJECTION	NAME (PART NUMBER): P-110001123	REVISION: 01	EATON
DESCRIPTION: ONELINE, XSTORAGE 250-1000KW BATT ENERGY STORAGE SYS (ENERONE+)				SIZE: B
ORIGINATED BY: STEVE POCTA	09-APR-2026	SEE NOTES FOR TOLERANCES DIM ARE IN MM (INCHES) AFTER PLATING INTERPRET DIM AND TOL PER ASME Y14.5-2018	STATE: RELEASE	SCALE: NTS
MODIFIED BY: S. POCTA	8-MAY-2026		CO: CO-0358506	SHEET: 5 OF 6

EATON CORPORATION - CONFIDENTIAL AND PROPRIETARY. NOTICE TO PERSONS RECEIVING THIS DOCUMENT AND/OR TECHNICAL INFORMATION THIS DOCUMENT, INCLUDING THE DRAWING AND INFORMATION CONTAINED THEREON, IS CONFIDENTIAL AND IS THE EXCLUSIVE PROPERTY OF EATON CORPORATION, AND IS MERELY ON LOAN AND SUBJECT TO RECALL BY EATON AT ANY TIME. BY TAKING POSSESSION OF THIS DOCUMENT, THE RECIPIENT ACKNOWLEDGES AND AGREES THAT THIS DOCUMENT CANNOT BE USED IN ANY MANNER ADVERSE TO THE INTERESTS OF EATON AND THAT NO PORTION OF THIS DOCUMENT MAY BE COPIED OR OTHERWISE REPRODUCED WITHOUT THE PRIOR WRITTEN CONSENT OF EATON. IN THE CASE OF CONFLICTING CONTRACTUAL PROVISIONS, THIS NOTICE SHALL GOVERN THE STATUS OF THIS DOCUMENT. © 2026 Eaton Corporation - All Rights Reserved.

Figure 82. P-110001123, xStorage 250–1000 Energy Storage System — Oneline — Page 6

NOTE 2:
CUSTOMER TO ADD QTY (2) FERRITE TO SHIELDED CAT6 CABLE CONNECTION INSIDE INVERTER AT 'MODBUS TPC' RJ45 JACK. LOOP CAT6 CABLE (3) TIMES THRU THE CENTER OF THE FERRITE BEADS AND CABLE AT RJ45 JACK. USE DMEGC P/N H48X30X15 R10K FERRITE OR EQUIVALENT. SEE TABLE G FOR FERRITE SPECIFICATION.

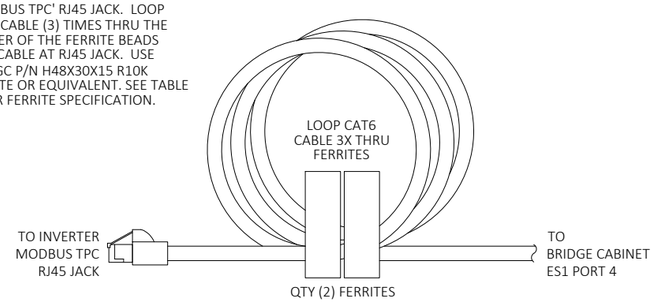

TABLE G FERRITE SPECIFICATIONS		
Manufacture	DMEGC	
Part Number	H48x30x15 R10K	
DIMENSIONS (mm)		
PROPERTY	VALUE	UNIT
Outside Diameter (max)	49.2	mm
Inside Diameter (min)	29	mm
Thickness (max)	16	mm
ELECTROMAGNETIC PROPERTY		
PROPERTY	VALUE	UNIT
Inductance Factor (AL)	14000 ± 30%	nH/N^2
Inductance (L)	1400 ± 25%	µH
R10K MATERIAL CHARACTERISTICS		
PROPERTY	VALUE	UNIT
Initial Permeability (µI)	10000 ± 25%	
Relative Loss Factor (tan g/µI) 10kHz	< 7.0 x 10	$x\ 10^{-6}$
Saturation Flux Density (Bs) 1149A/m	400	mT
Residual flux density (Br)	100	mT
Coercivity Force (Hc)	6.5	A/m
Rel. Temp. Coef. (µr) 20-60°C	-0.5 ~ 2.0	$x\ 10^{-6}$ / °C
Hysteresis material constant (nB) 25°C, 10kz, 1.5~3mT	< 1.4	$x10^{-6}$ / mT
Curie Temp (Tc)	> 120	°C
Resistivity (ρ)	0.15	Ω.m
Density (d)	4.9	G/cm^3

METRIC	THIRD ANGLE PROJECTION	NAME (PART NUMBER): P-110001123	REVISION: 01	EATON
DESCRIPTION: ONELINE, XSTORAGE 250-1000KW BATT ENERGY STORAGE SYS (ENERONE+)				SIZE: B
ORIGINATED BY: STEVE POCTA	09-APR-2026	SEE NOTES FOR TOLERANCES DIM ARE IN MM (INCHES) AFTER PLATING INTERPRET DIM AND TOL PER ASME Y14.5-2018	STATE: RELEASE	SCALE: NTS
MODIFIED BY: S. POCTA	8-MAY-2026		CO: CO-0358506	SHEET: 6 OF 6

EATON CORPORATION - CONFIDENTIAL AND PROPRIETARY. NOTICE TO PERSONS RECEIVING THIS DOCUMENT AND/OR TECHNICAL INFORMATION
THIS DOCUMENT, INCLUDING THE DRAWING AND INFORMATION CONTAINED THEREON, IS CONFIDENTIAL AND IS THE EXCLUSIVE PROPERTY OF EATON CORPORATION, AND IS MERELY ON LOAN AND SUBJECT TO RECALL BY EATON AT ANY TIME. BY TAKING POSSESSION OF THIS DOCUMENT, THE RECIPIENT ACKNOWLEDGES AND AGREES THAT THIS DOCUMENT CANNOT BE USED IN ANY MANNER ADVERSE TO THE INTERESTS OF EATON AND THAT NO PORTION OF THIS DOCUMENT MAY BE COPIED OR OTHERWISE REPRODUCED WITHOUT THE PRIOR WRITTEN CONSENT OF EATON. IN THE CASE OF CONFLICTING CONTRACTUAL PROVISIONS, THIS NOTICE SHALL GOVERN THE STATUS OF THIS DOCUMENT. © 2026 Eaton Corporation - All Rights Reserved.

8.2 Site Plan Drawings

The system site plan drawings in this section show the simplified offerings and installation guidance of the xStorage 250-1000.

Figure 83. P-110001098, xStorage 250–1000, System Elevation Drawing — Page 1

TABLE A: WEIGHT & CENTER OF GRAVITY		DIMENSIONS MM [INCH]			WEIGHT kg [lbs]
		A	B	C	
CONTROL CABINET & AUX TRANSFORMER	1	781.06 [30.8]	568.98 [22.4]	875.03 [34.5]	557.01 [1228.0]
CAB1000 INVERTER	2	600 [23.6]	510 [20.1]	1110.25 [43.7]	1439 [3172.5]
8 MODULE ENERONE+ BATTERY RACK	3	825 [32.5]	860 [26]	660 [26]	3600 [7936.6]

A	LIFTING EYEBOLT LOCATIONS

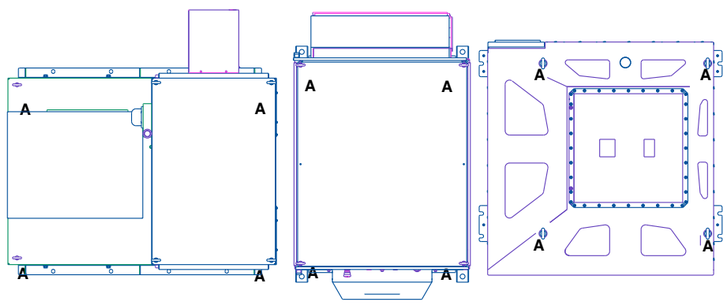

TOP VIEW

TABLE B: SYSTEM SPECIFICATIONS

SYSTEM	AC INPUT/ OUTPUT VOLTAGE	AC INPUT/ OUTPUT CURRENT	DC INPUT VOLTAGE	DC INPUT CURRENT	30°C AMBIENT QTY OF BATTERY RACKS	40°C AMBIENT QTY OF BATTERY RACKS	50°C AMBIENT QTY OF BATTERY RACKS
kW	VAC	A	VDC	A	MIN QTY	MIN QTY	MIN QTY
250	480	301	1331.2	188	1	1	1
300		361		226			
350		421		263		2	2
400		482		301	2		
450		542		339			
500		602		376			
550		662		414			
600		722		451			
650		782		489			3
700		842		526		3	
750		903		564	3		
800		963		601			
850		1023		639			
900		1083		677			
950		1143		714			N/A
1000		1203		752		N/A	

MAX DC CURRENT PER BATTERY RACK: 30°C = 263A; 40°C = 245A; 50°C = 226A
BASED ON DC CABLE TYPE XLPE 2000V 105°C RATED EQUIVALENT TO:
MANF. ADC P/N 30302NPV_ET

NO. OF 8 MODULE ENERONE+ BATTERY RACKS	CAPACITY (kWh)
1	379.4
2	758.8
3	1138.2
4	1517.6
5	1897
6	2276.4
7	2655.8
8	3035.2

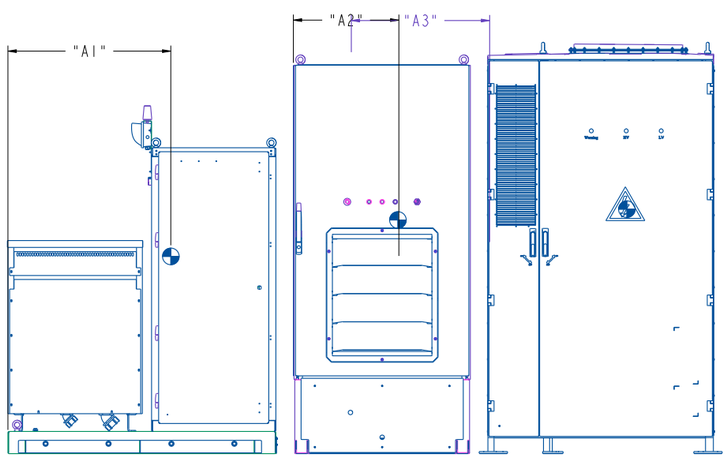

FRONT VIEW

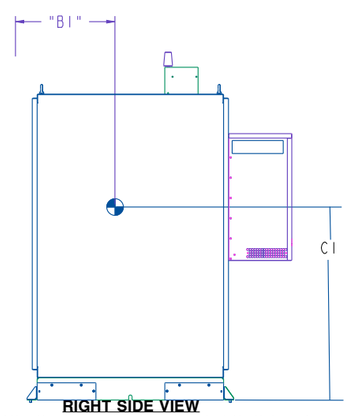

RIGHT SIDE VIEW
CONTROL CABINET AND AUX TRANSFORMER

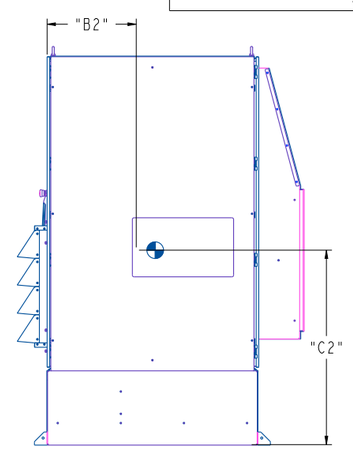

RIGHT SIDE VIEW
CAB1000 INVERTER

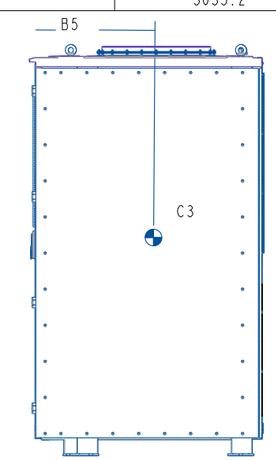

RIGHT SIDE VIEW
ENERONE+ BATTERY RACK

METRIC | THIRD ANGLE PROJECTION | DWG. (PART NUMBER): P-110001098 | REVISION: 01 | EATON
DESCRIPTION: xSTORAGE 250-2000, SYSTEM ELEVATION | SIZE: A0
DESIGNED BY: S. DAVIS | 2/5/2026 | SEE NOTES FOR TOLERANCES ±0.005" IN MM FRACTIONS AFTER PLATING ±0.005" IN MM AND TOL PER ISOM 1101:2004 | STATE: RELEASE | SCALE: 0.100
MODIFIED BY: | SHEET: 1 OF 8 | DIM:

LEGAL DISCLAIMER: THE DRAWING IS THE PROPERTY OF EATON. PRIOR TO EXPORT, THE DRAWING MUST BE REVIEWED FOR EXPORT COMPLIANCE. THE DRAWING MAY NOT BE EXPORTED OR DISCLOSED TO ANY PERSON OR ENTITY WITHOUT EXPORT AUTHORIZATION. THE DRAWING MAY NOT BE REPRODUCED OR DISCLOSED WITHOUT PRIOR WRITTEN AUTHORIZATION. THE DRAWING MAY NOT BE USED FOR ANY PURPOSE OTHER THAN THE PURPOSE FOR WHICH IT WAS PROVIDED.

Figure 84. P-110001098, xStorage 250–1000, System Elevation Drawing — Page 2

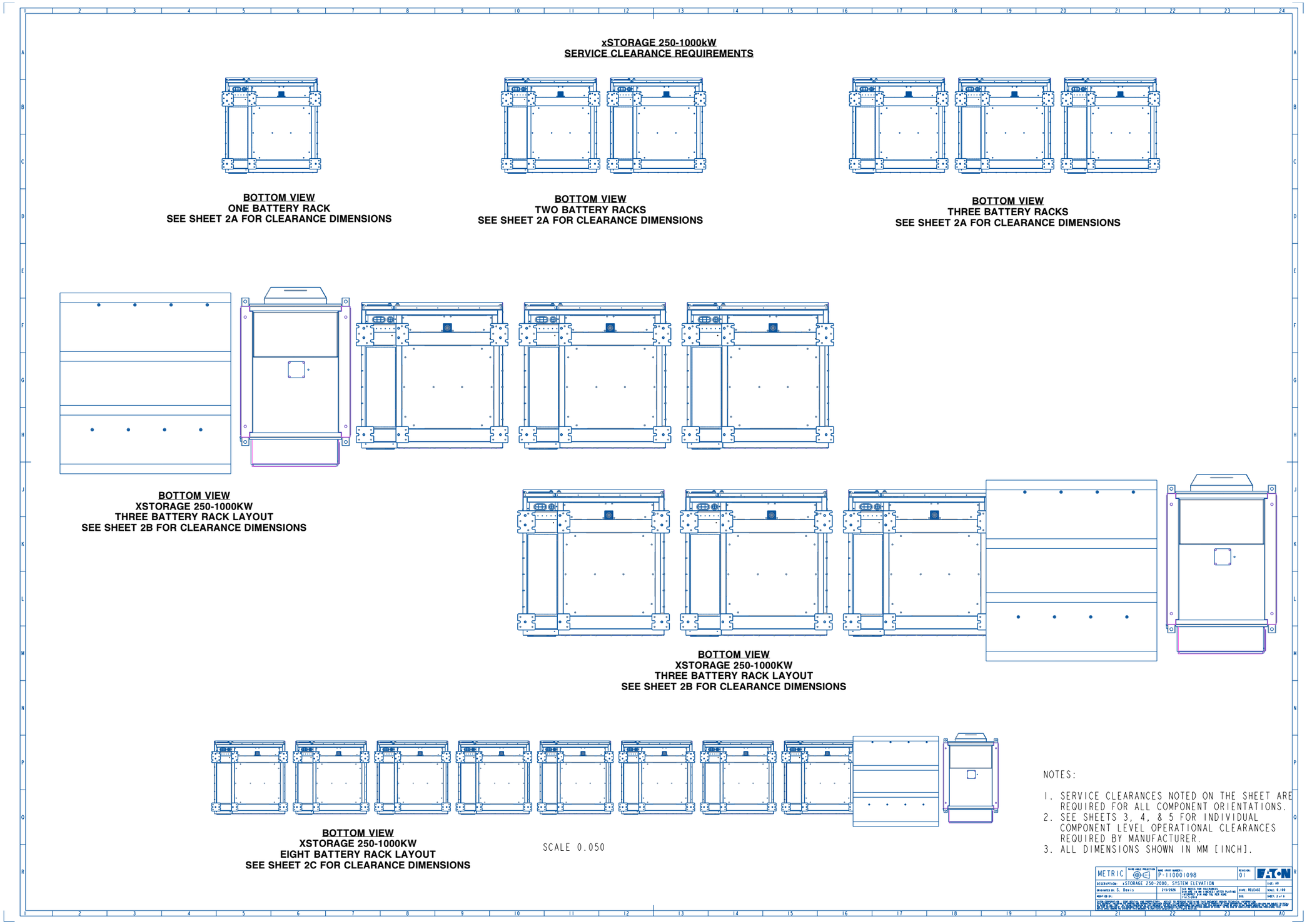

Figure 85. P-110001098, xStorage 250–1000, System Elevation Drawing — Page 3

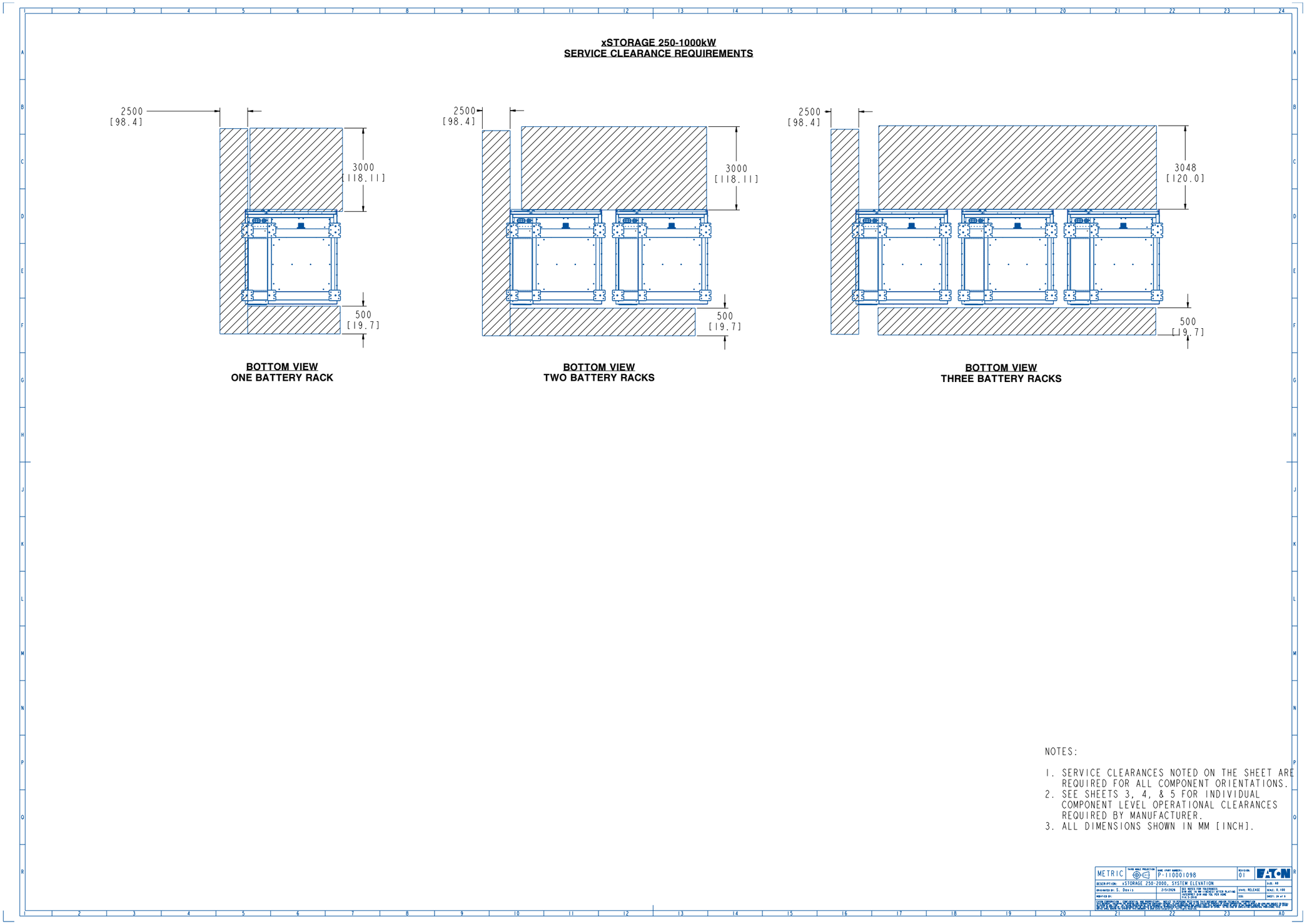

Figure 86. P-110001098, xStorage 250–1000, System Elevation Drawing — Page 4

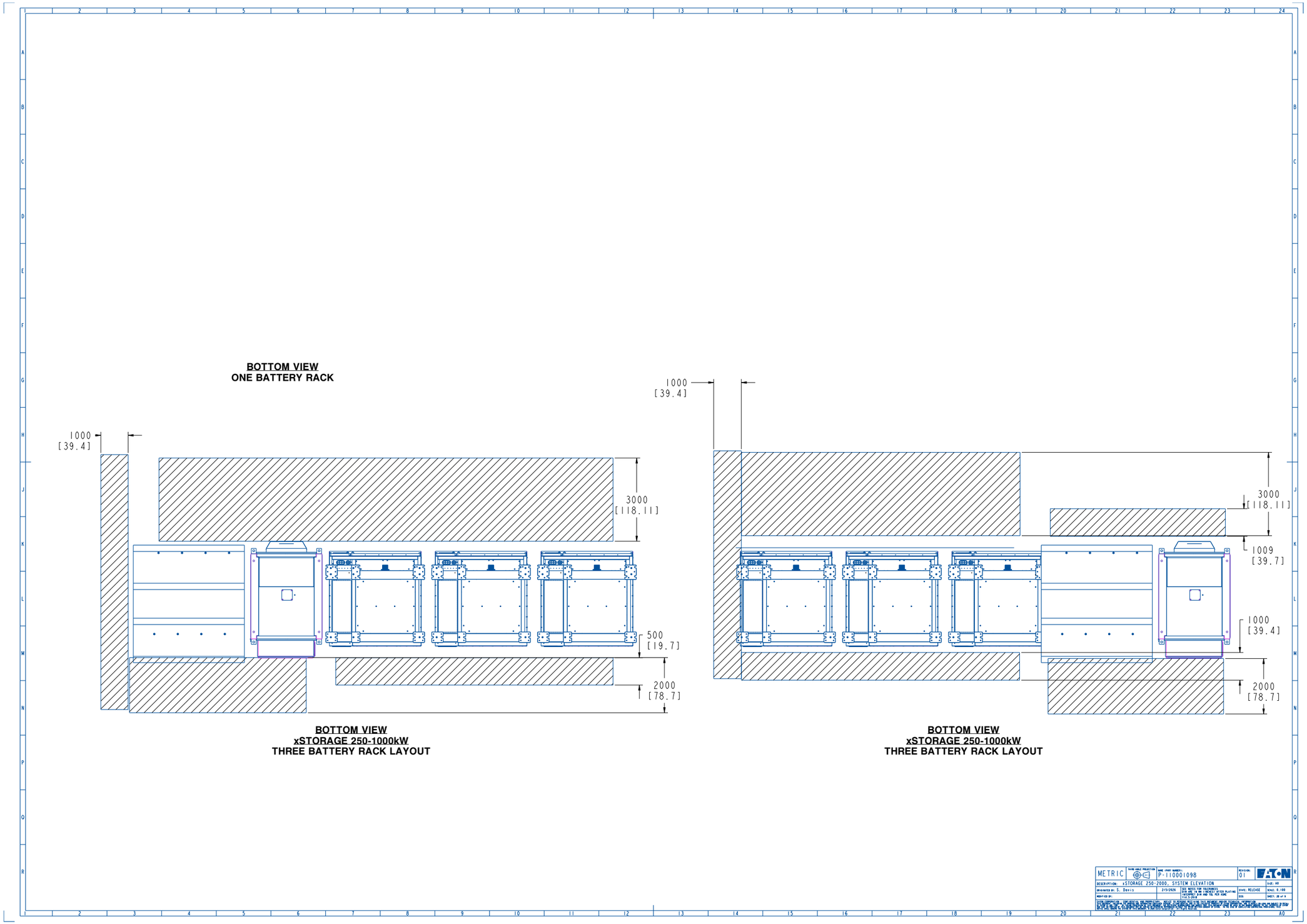

Figure 87. P-110001098, xStorage 250–1000, System Elevation Drawing — Page 5

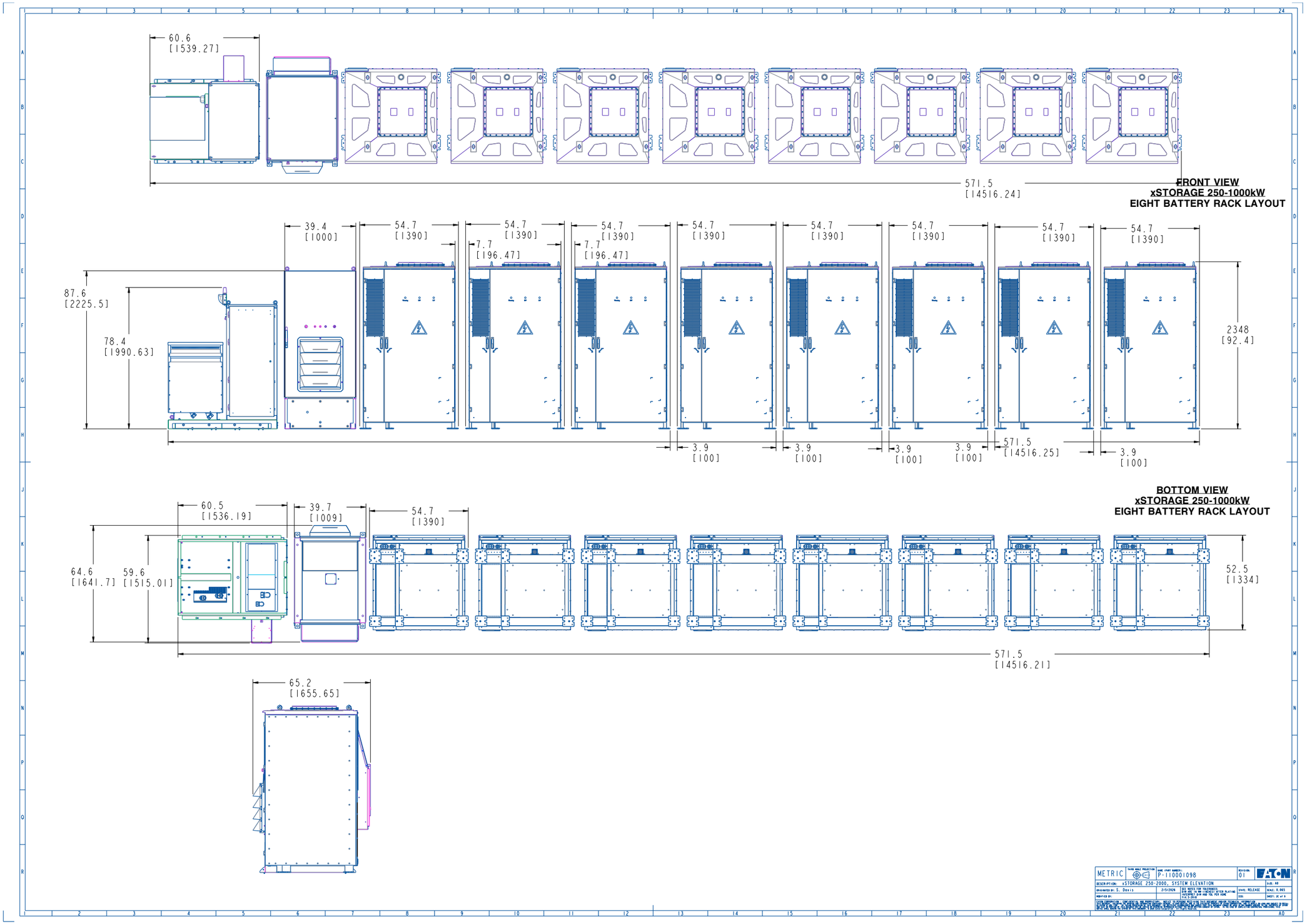

Figure 88. P-110001098, xStorage 250–1000, System Elevation Drawing — Page 6

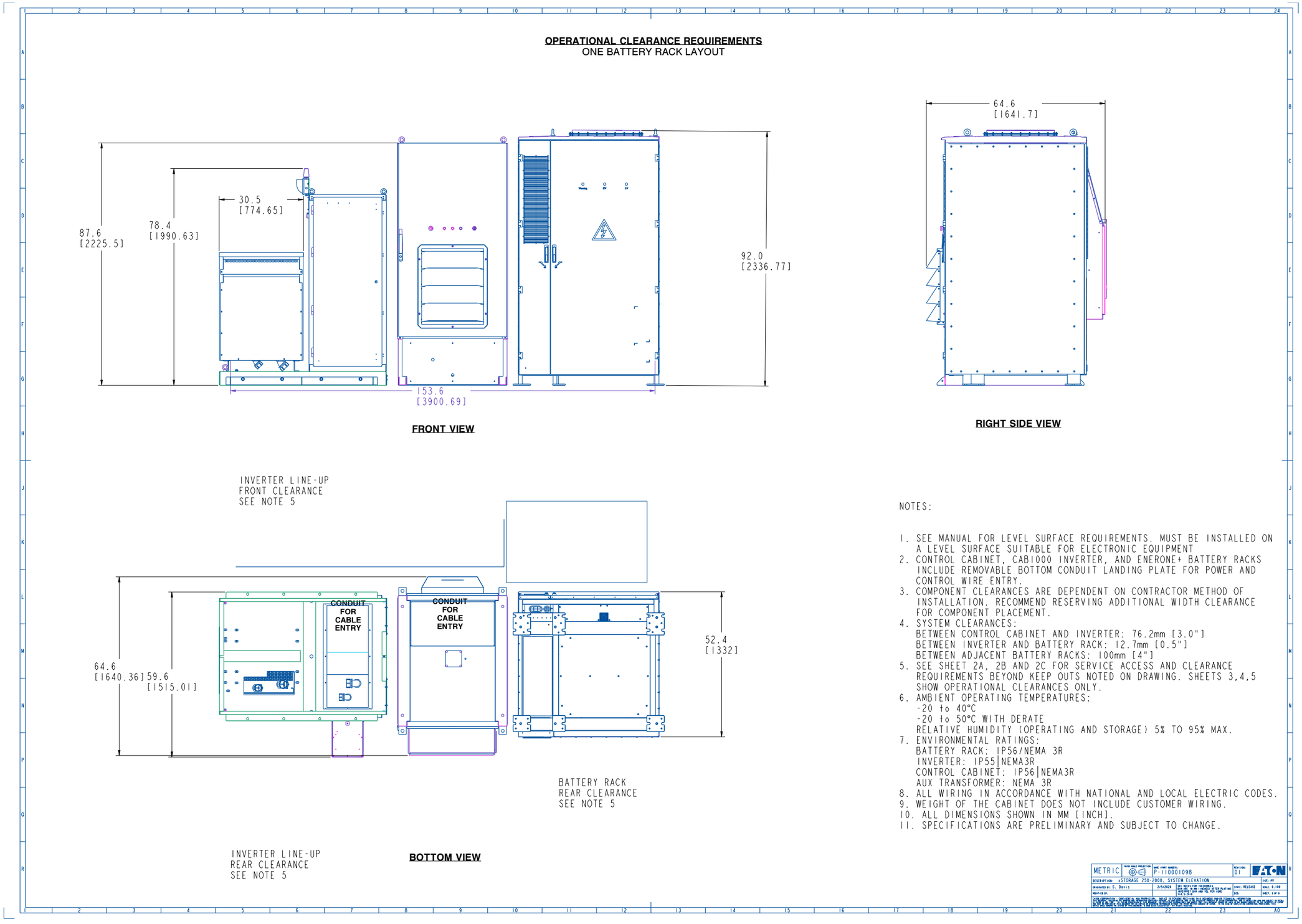

Figure 89. P-110001098, xStorage 250–1000, System Elevation Drawing — Page 7

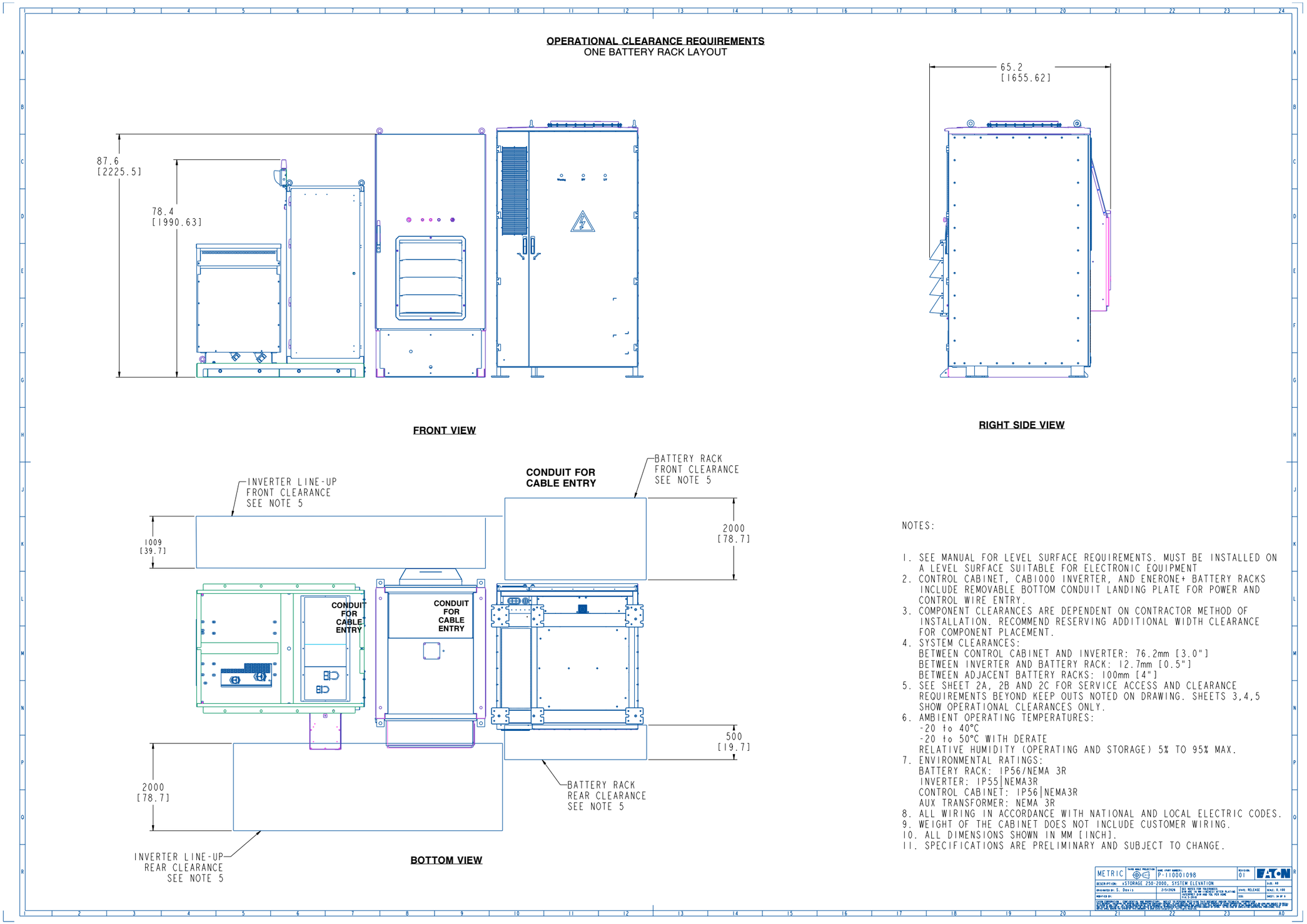

Figure 90. P-110001098, xStorage 250–1000, System Elevation Drawing — Page 8

OPERATIONAL CLEARANCE REQUIREMENTS
TWO BATTERY RACK LAYOUT

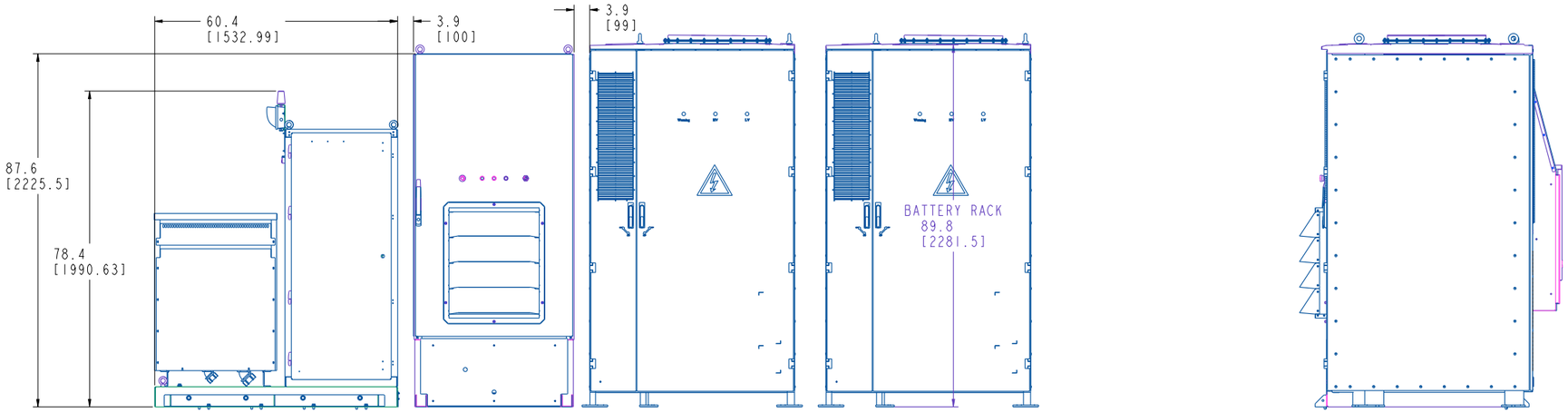

FRONT VIEW

RIGHT SIDE VIEW

INVERTER LINE-UP
FRONT CLEARANCE
SEE NOTE 5

BATTERY RACK
FRONT CLEARANCE
SEE NOTE 5

CONDUIT FOR CABLE ENTRY

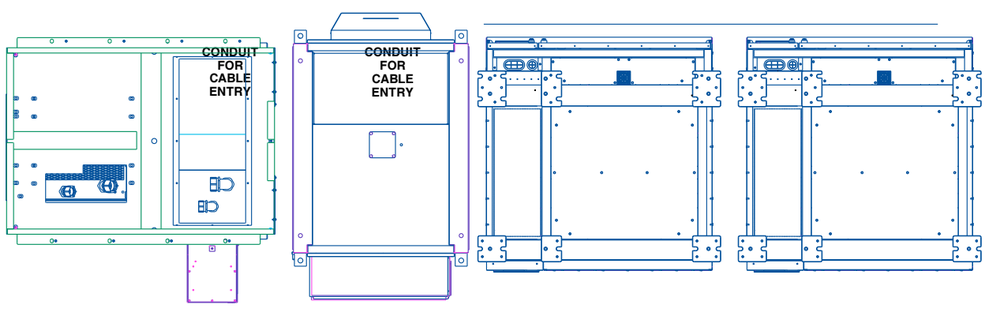

BOTTOM VIEW
SEE SHEET 4A FOR OPERATIONAL CLEARANCE DIMENSIONS

NOTES:

1. SEE MANUAL FOR LEVEL SURFACE REQUIREMENTS. MUST BE INSTALLED ON A LEVEL SURFACE SUITABLE FOR ELECTRONIC EQUIPMENT
2. CONTROL CABINET, CABI000 INVERTER, AND ENERONE+ BATTERY RACKS INCLUDE REMOVABLE BOTTOM CONDUIT LANDING PLATE FOR POWER AND CONTROL WIRE ENTRY.
3. COMPONENT CLEARANCES ARE DEPENDENT ON CONTRACTOR METHOD OF INSTALLATION. RECOMMEND RESERVING ADDITIONAL WIDTH CLEARANCE FOR COMPONENT PLACEMENT.
4. SYSTEM CLEARANCES:
   BETWEEN CONTROL CABINET AND INVERTER: 76.2mm [3.0"]
   BETWEEN INVERTER AND BATTERY RACK: 12.7mm [0.5"]
   BETWEEN ADJACENT BATTERY RACKS: 100mm [4"]
5. SEE SHEET 2A, 2B AND 2C FOR SERVICE ACCESS AND CLEARANCE REQUIREMENTS BEYOND KEEP OUTS NOTED ON DRAWING. SHEETS 3,4,5 SHOW OPERATIONAL CLEARANCES ONLY.
6. AMBIENT OPERATING TEMPERATURES:
   -20 to 40°C
   -20 to 50°C WITH DERATE
   RELATIVE HUMIDITY (OPERATING AND STORAGE) 5% TO 95% MAX.
7. ENVIRONMENTAL RATINGS:
   BATTERY RACK: IP56|NEMA3R
   INVERTER: IP56|NEMA3R
   CONTROL CABINET: IP56|NEMA3R
   AUX TRANSFORMER: NEMA 3R
8. ALL WIRING IN ACCORDANCE WITH NATIONAL AND LOCAL ELECTRIC CODES.
9. WEIGHT OF THE CABINET DOES NOT INCLUDE CUSTOMER WIRING.
10. ALL DIMENSIONS SHOWN IN MM [INCH].
11. SPECIFICATIONS ARE PRELIMINARY AND SUBJECT TO CHANGE.

METRIC	NAME (PART NUMBER): P-110001098		REVISION: 01
DESCRIPTION: xSTORAGE 250-2000, SYSTEM ELEVATION			SIZE: A0
DRAWN/REV BY: S. Davis	2/5/2020	SEE NOTES FOR TOLERANCES UNLESS OTHERWISE SPECIFIED. PLATING THICKNESS	STATE: RELEASE	SCALE: 0.100
WEIGHT-CG BY:		HARDNESS	DATE:	SHEET: A OF 9

COPYRIGHT © 2019 EATON CORPORATION. ALL RIGHTS RESERVED. THIS DOCUMENT IS THE PROPERTY OF EATON CORPORATION. IT MAY NOT BE REPRODUCED OR TRANSMITTED IN ANY FORM OR BY ANY MEANS, ELECTRONIC OR MECHANICAL, WITHOUT THE PRIOR WRITTEN PERMISSION OF EATON CORPORATION.

Figure 91. P-110001098, xStorage 250–1000, System Elevation Drawing — Page 9

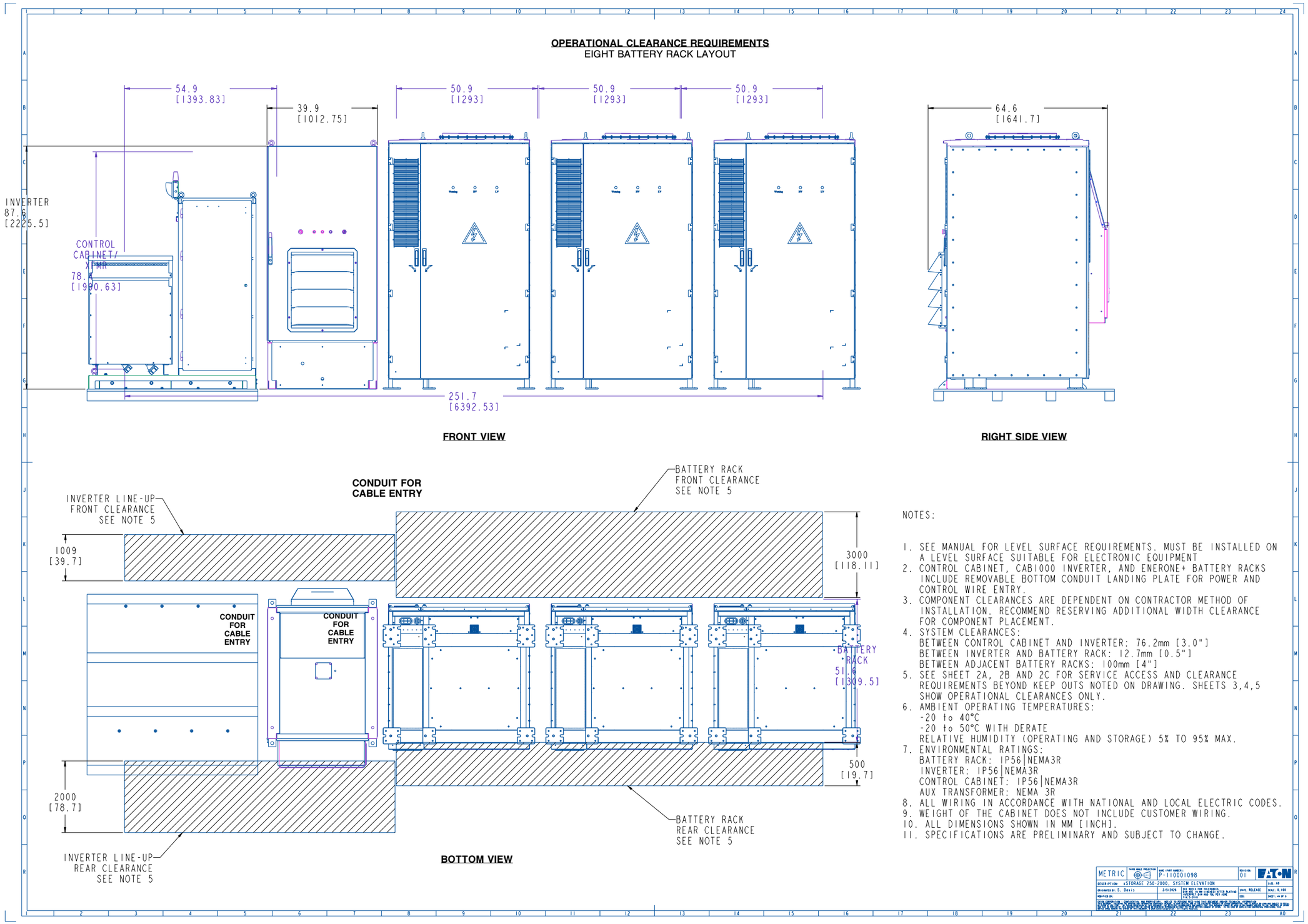

NOTES:

1. SEE MANUAL FOR LEVEL SURFACE REQUIREMENTS. MUST BE INSTALLED ON A LEVEL SURFACE SUITABLE FOR ELECTRONIC EQUIPMENT
2. CONTROL CABINET, CABI000 INVERTER, AND ENERONE+ BATTERY RACKS INCLUDE REMOVABLE BOTTOM CONDUIT LANDING PLATE FOR POWER AND CONTROL WIRE ENTRY.
3. COMPONENT CLEARANCES ARE DEPENDENT ON CONTRACTOR METHOD OF INSTALLATION. RECOMMEND RESERVING ADDITIONAL WIDTH CLEARANCE FOR COMPONENT PLACEMENT.
4. SYSTEM CLEARANCES:
   BETWEEN CONTROL CABINET AND INVERTER: 76.2mm [3.0"]
   BETWEEN INVERTER AND BATTERY RACK: 12.7mm [0.5"]
   BETWEEN ADJACENT BATTERY RACKS: 100mm [4"]
5. SEE SHEET 2A, 2B AND 2C FOR SERVICE ACCESS AND CLEARANCE REQUIREMENTS BEYOND KEEP OUTS NOTED ON DRAWING. SHEETS 3,4,5 SHOW OPERATIONAL CLEARANCES ONLY.
6. AMBIENT OPERATING TEMPERATURES:
   -20 to 40°C
   -20 to 50°C WITH DERATE
   RELATIVE HUMIDITY (OPERATING AND STORAGE) 5% TO 95% MAX.
7. ENVIRONMENTAL RATINGS:
   BATTERY RACK: IP56|NEMA3R
   INVERTER: IP56|NEMA3R
   CONTROL CABINET: IP56|NEMA3R
   AUX TRANSFORMER: NEMA 3R
8. ALL WIRING IN ACCORDANCE WITH NATIONAL AND LOCAL ELECTRIC CODES.
9. WEIGHT OF THE CABINET DOES NOT INCLUDE CUSTOMER WIRING.
10. ALL DIMENSIONS SHOWN IN MM [INCH].
11. SPECIFICATIONS ARE PRELIMINARY AND SUBJECT TO CHANGE.

Figure 92. P-110001098, xStorage 250–1000, System Elevation Drawing — Page 10

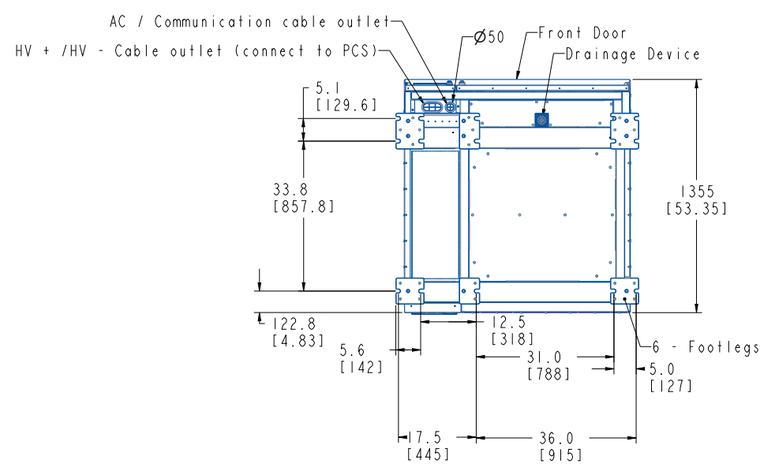

Figure 93. P-110001098, xStorage 250–1000, System Elevation Drawing — Page 11

TABLE D: CONTROL WIRING

CABLE #	CONNECTION	FROM	TO	NOMINAL VOLTAGE	CABLE QTY/AWG (90°C, THHN)	EMT CONDUIT SIZE (in.)	CONDUIT #
C1	CONTROL CABINET INPUT POWER	CONTROL CABINET: DB1, DB2, DB3, GND	SITE SWITCHBOARD: CB2-2, CB2-4, CB2-6, GND	480 VAC	4/C #6	1.25	1
C2	SITE INPUT METER PT	CONTROL CABINET: TB2-4, TB3-5, TB3-6	SITE SWITCHBOARD: SUB LINE SIDE ØA-V, ØB-V, ØC-V	480 VAC	3/C #14	0.75	2
C3	SITE METER CT	CONTROL CABINET: TB2-15, TB2-16, TB2-17, TB2-18, TB2-19, TB2-20	SITE SWITCHBOARD: CT1 ØA-X1, ØA-X2, ØB-X1, ØB-X2, ØC-X1, ØC-X2	480 VAC	6/C #14		
C4	BESS METER PT	CONTROL CABINET: TB2-1, TB3-2, TB3-3	SITE SWITCHBOARD: CB1 LOAD SIDE ØA-V, ØB-V, ØC-V	480 VAC	3/C #14	0.75	3
C5	BESS METER CT	CONTROL CABINET: TB2-8, TB2-9, TB2-10, TB2-11, TB2-12, TB2-13	SITE SWITCHBOARD: CT2 ØA-X1, ØA-X2, ØB-X1, ØB-X2, ØC-X1, ØC-X2	480 VAC	6/C #14		
C6	INVERTER COOLING POWER	CONTROL CABINET: TB1-1, TB1-2, TB1-3	INVERTER: XD17-1, XD17-2, XD17-3	208 VAC	3/C #12	0.50	4
C7	INVERTER CONTROL POWER	CONTROL CABINET: TB1-4, TB1-5, TB1-6	INVERTER: XD17-4, XD17-5, XD17-6	208 VAC	3/C #12		
C8	INVERTER MODBUS TCP (SEE NOTE 2 ON SHEET 9)	BRIDGE CABINET: ES1-4	INVERTER: MODBUS TCP RJ45 PORT	24 VDC	SHIELDED CAT6	0.50	5
C9*	MX1 CLOSE	INVERTER: M10-14, XD22-2	SITE SWITCHBOARD: MX2 CONTROL PAN TB1-15,16	24 VDC	2/C #18	0.50	6
C10*	MX2 CLOSE	INVERTER CAB1000: XD3-2, XD3-5	SITE SWITCHBOARD: MX2 CONTROL PAN TB1-17,18	24 VDC	2/C #18		
C11*	MX2 LINE VOLTAGE SENSE	INVERTER CAB1000: REMOTE SENSE L1, L2, L3	SITE SWITCHBOARD: MX2 CONTROL PAN TB1-11,12,13	480 VAC	3/C #18		
C12	BMS & FIRE PANEL COMMUNICATION	CONTROL CABINET: TB3-31, TB3-32, TB3-33, TB3-34, TB3-35, TB3-36	BATTERY RACK #1: JX3-C, JX3-D, JX3-E, JX3-F, JX3-G, JX3-H	24 VDC	6/C #22	0.75	7
		CONTROL CABINET: TB3-38, TB3-39, TB3-40	BATTERY RACK #1: JX3-A, JX3-B	24 VDC	1/#22 TWISTED PAIR SHIELDED		
C13	BATTERY RACK 1 AUX POWER	CONTROL CABINET: TB1-8, TB1-9, TB1-11, TB1-12	BATTERY RACK #1: JXH1-A, JXH1-B, JXH1-C, JXH1-D	208 VAC	2/C #18 2/C #12	0.50	8
C14	BATTERY RACK 1 TO RACK 2 BMS & FIRE PANEL COMMUNICATION	BATTERY RACK #1: JX2-C, JX2-D, JX2-E, JX2-F, JX2-G, JX2-H	BATTERY RACK #2: JX3-C, JX3-D, JX3-E, JX3-F, JX3-G, JX3-H	24 VDC	6/C #22	0.75	9
		BATTERY RACK #1: JX2-A, JX2-B	BATTERY CABINET #2: JX3-A, JX3-B	24 VDC	1/#22 TWISTED PAIR SHIELDED		
C15	BATTERY RACK 2 AUX POWER	CONTROL CABINET: TB1-14, TB1-15, TB1-17, TB1-18	BATTERY RACK #2: JXH1-A, JXH1-B, JXH1-C, JXH1-D	208 VAC	2/C #18 2/C #12	0.50	10
C16	BATTERY RACK 2 TO RACK 3 BMS & FIRE PANEL COMMUNICATION	BATTERY RACK #2: JX2-C, JX2-D, JX2-E, JX2-F, JX2-G, JX2-H	BATTERY RACK #3: JX3-C, JX3-D, JX3-E, JX3-F, JX3-G, JX3-H	24 VDC	6/C #22	0.75	11
		BATTERY RACK #2: JX2-A, JX2-B	BATTERY RACK #3: JXH1-A, JXH1-B, JXH1-C, JXH1-D	24 VDC	1/#22 TWISTED PAIR SHIELDED		
C17	BATTERY RACK 3 AUX POWER	CONTROL CABINET: TB1-20, TB1-21, TB1-23, TB1-24	BATTERY RACK #3: JXH1-A, JXH1-B, JXH1-C, JXH1-D	208 VAC	2/C #18 2/C #12	0.50	12

* CABLE # C9, C10, C11 ONLY REQUIRED IN GRID FORMING APPLICATIONS. C9 & C10 TO BE 600V RATED IF PLACED IN SINGLE CONDUIT WITH C11.
ADD #18 WIRE JUMPER FROM INVERTER XD22-1 TO M10-13 FOR GRID FORMING APPLICATIONS.

METRIC | THIRD ANGLE PROJECTION | NAME (PART NUMBER): P-110001098 | REVISION: 01 | EATON
DESCRIPTION: xSTORAGE 250-2000, SYSTEM ELEVATION | SIZE: A0
DRAWNED BY: S. DAVIS | 2/3/2026 | ISS NOTES FOR TOLERANCE, DIM ARE IN MM (INCHES) AFTER PLATING UNLESS OTHERWISE NOTED, FLS 3-2010 | STAGE: RELEASE | SCALE: 0.100
MODIFIED BY: | SIZE: | SHEET: 1 OF 9
LEGAL DISPLAYED: THE DATA HERE IN THE PROPRIETARY, PRIVATE OR OTHERWISE RESTRICTED INFORMATION, TECHNOLOGY, TECHNOLOGY AND/OR SOFTWARE OF EATON CORPORATION. THE DATA HERE IS THE PROPERTY OF EATON CORPORATION AND MUST BE RETURNED UPON REQUEST. THE DATA HERE MAY NOT BE DISCLOSED, REPRODUCED OR USED WITHOUT THE WRITTEN PERMISSION OF EATON CORPORATION.

Figure 94. P-110001098, xStorage 250–1000, System Elevation Drawing — Page 12

TABLE D SYSTEM BREAKER TABLE			
SYSTEM (KW)	BREAKER	CURRENT RATING (A)	
		100% RATED	80% RATED
1000	SUB, CB1, MX2*	1600	1600
800	SUB, CB1, MX2*	1000	1200
700	SUB, CB1, MX2*	1000	1200
500	SUB, CB1, MX2*	700	800
350	SUB, CB1, MX2*	500	600
250	SUB, CB1, MX2*	350	400
BRIDGE CABINET P/N	BREAKER	CURRENT RATING (A)	
		100% RATED	80% RATED
P-103004900 (3 BATT MAX)	CB2	50	60
P-103005650 (8 BATT MAX)	CB2	80	100
ALL BREAKERS REQUIRE: AUX CONTACTS = 2A2B ALARM CONTACTS = 1A1B * OPTIONAL MX2 ONLY REQUIRED FOR GRID FORMING APPLICATIONS. BREAKER REQUIRES: 120V SPRING CHARGE 120V SPRING RELEASE (CLOSE OPERATION) 120V SHUNT TRIP (OPEN OPERATION)			

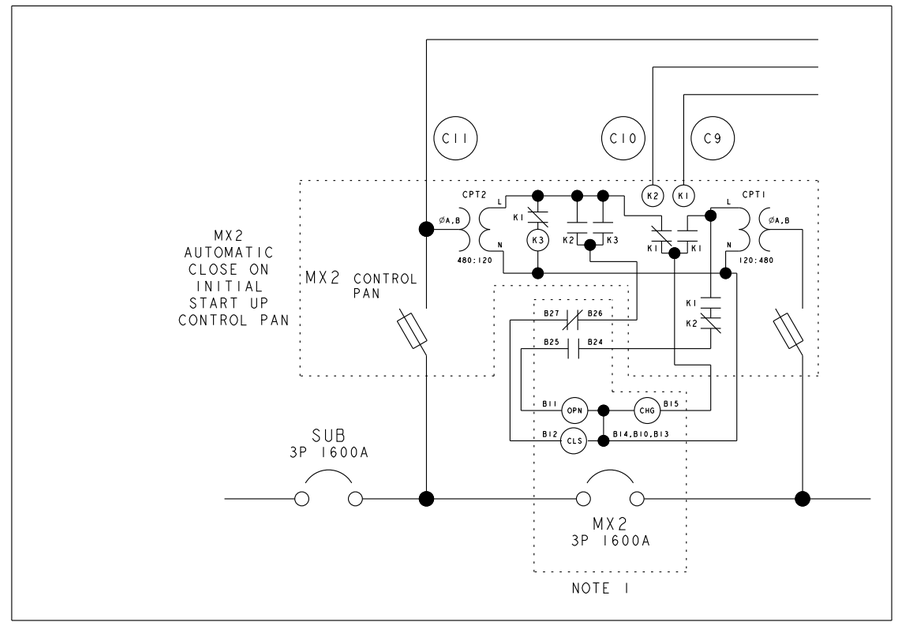

TABLE F: INPUT TRANSFORMER TABLE	
SYSTEM POWER (KW)	TRANSFORMER RATING (KVA)
850-1000	1200
700-800	1000
450-650	750
300-400	500
250	300
INPUT TRANSFORMER REQUIREMENTS: 480 Y 277 PRI.- 480V DELTA SEC. ISOLATION TRANSFORMER TAPS 2 @ +2.5%, 2 @ -2.5% 150℃ RISE ELECTROSTATIC SHIELD DELTA SECONDARY FACES INVERTER. SEE INVERTER MANUAL FOR ADDITIONAL TRANSFORMER REQUIREMENTS.	

NOTE 1: OPTIONAL MX2 BREAKER AND MX2 CONTROL PAN ONLY REQUIRED FOR GRID FORMING APPLICATIONS. MX2 CONTROL TERMINALS IDENTIFIED ARE BASED ON EATON MAGNUM BREAKER TERMINALS FOR REFERENCE. SHEET 6 DEPICTS MX2 CONTROL PAN THAT REQUIRES MANUALLY CLOSING MX2 BREAKER ON INITIAL STARTUP. SEE SHEET 8 FOR MX2 CONTROL PAN CONFIGURATION THAT AUTO CLOSES MX2 ON INITIAL START UP.

METRIC | THIRD ANGLE PROJECTION | DWG. (PART NUMBER): P-110001098 | REVISION: 01 | EATON
DESCRIPTION: xSTORAGE 250-2000, SYSTEM ELEVATION | SIZE: A0
DRAWN BY: S. Davis | 2/5/2026 | SEE NOTES FOR TOLERANCES, FINISHES, & PAINT SPECS. & FOR PLATING SPECIFIC & PAINT AND TEL. NEW SIZE 17x12-2010 | DATE: RELEASE | SCALE: 0.100
MODIFIED BY: | CO: CO-0350627 | SHEET: 0 OF 0

Figure 95. P-110001098, xStorage 250–1000, System Elevation Drawing — Page 13

TABLE D SYSTEM BREAKER TABLE			
SYSTEM (KW)	BREAKER	CURRENT RATING (A)	
		100% RATED	80% RATED
1000	SUB, CB1, MX2*	1600	1600
800	SUB, CB1, MX2*	1000	1200
700	SUB, CB1, MX2*	1000	1200
500	SUB, CB1, MX2*	700	800
350	SUB, CB1, MX2*	500	600
250	SUB, CB1, MX2*	350	400
BRIDGE CABINET P/N	BREAKER	CURRENT RATING (A)	
		100% RATED	80% RATED
P-103004900 (3 BATT MAX)	CB2	50	60
P-103005650 (8 BATT MAX)	CB2	80	100
ALL BREAKERS REQUIRE: AUX CONTACTS = 2A2B ALARM CONTACTS = 1A1B * OPTIONAL MX2 ONLY REQUIRED FOR GRID FORMING APPLICATIONS. BREAKER REQUIRES: 120V SPRING CHARGE 120V SPRING RELEASE (CLOSE OPERATION) 120V SHUNT TRIP (OPEN OPERATION)			

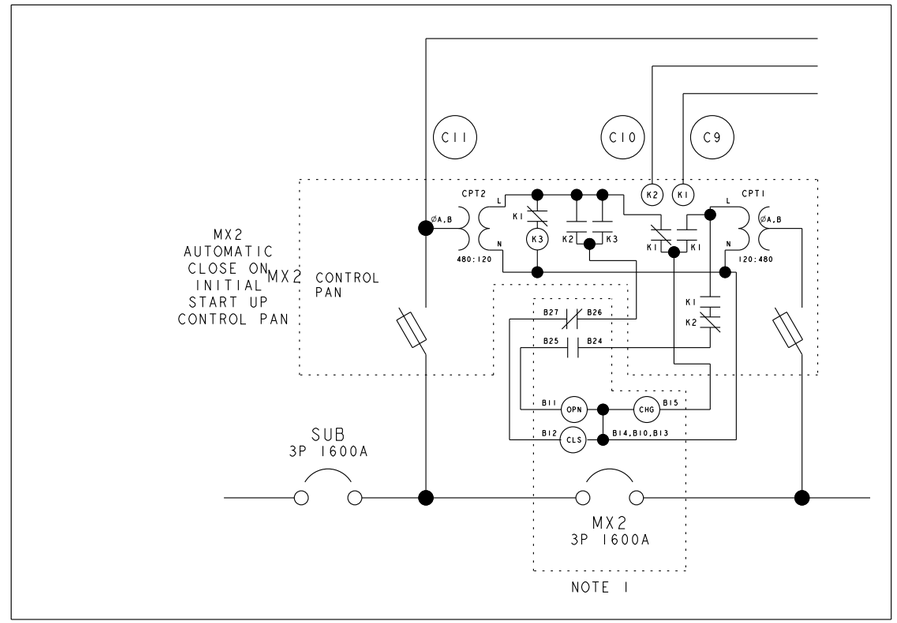

TABLE F: INPUT TRANSFORMER TABLE	
SYSTEM POWER (KW)	TRANSFORMER RATING (KVA)
850-1000	1200
700-800	1000
450-650	750
300-400	500
250	300
INPUT TRANSFORMER REQUIREMENTS: 480 Y 277 PRI.- 480V DELTA SEC. ISOLATION TRANSFORMER TAPS 2 @ +2.5%, 2 @ -2.5% 150°C RISE ELECTROSTATIC SHIELD DELTA SECONDARY FACES INVERTER. SEE INVERTER MANUAL FOR ADDITIONAL TRANSFORMER REQUIREMENTS.	

NOTE 1: OPTIONAL MX2 BREAKER AND MX2 CONTROL PAN ONLY REQUIRED FOR GRID FORMING APPLICATIONS. MX2 CONTROL TERMINALS IDENTIFIED ARE BASED ON EATON MAGNUM BREAKER TERMINALS FOR REFERENCE. SHEET 6 DEPICTS MX2 CONTROL PAN THAT REQUIRES MANUALLY CLOSING MX2 BREAKER ON INITIAL STARTUP. SEE SHEET 8 FOR MX2 CONTROL PAN CONFIGURATION THAT AUTO CLOSES MX2 ON INITIAL START UP.

Figure 96. P-110001098, xStorage 250–1000, System Elevation Drawing — Page 14

NOTE 2:
CUSTOMER TO ADD QTY (2) FERRITE TO SHIELDED CAT6 CABLE CONNECTION INSIDE INVERTER AT 'MODBUS TPC' RJ45 JACK. LOOP CAT6 CABLE (3) TIMES THRU THE CENTER OF THE FERRITE BEADS AND CABLE AT RJ45 JACK. USE DMEGC P/N H48X30X15 R10K FERRITE OR EQUIVALENT. SEE TABLE G FOR FERRITE SPECIFICATION.

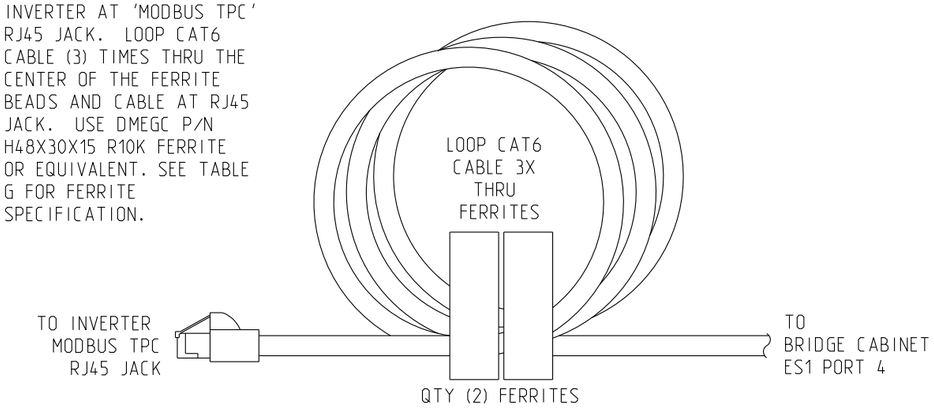

TABLE G: FERRITE SPECIFICATIONS		
MANUFACTURER	DMEGC	
PART NUMBER	H48x30x15 R10K	
DIMENSIONS (MM)		
PROPERTY	VALUE	UNIT
OUTSIDE DIAMETER (MAX)	49.2	MM
INSIDE DIAMETER (MIN)	29	MM
THICKNESS (MAX)	16	MM
ELECTROMAGNETIC PROPERTIES		
PROPERTY	VALUE	UNIT
INDUCTANCE FACTOR (AL)	14000 ± 30%	nH/N^2
INDUCTANCE (L)	1400 ± 25%	µH
R10K MATERIAL CHARACTERISTICS		
PROPERTY	VALUE	UNIT
INITIAL PERMEABILITY (µI)	10000 ± 25%	
RELATIVE LOSS FACTOR (tan g/(µI) 10kHz	<7.0 x 10	$x10^{-6}$
SATURATION FLUX DENSITY (Bs) 1149A/m	400	mT
RESIDUAL FLUX DENSITY (Br)	100	mT
COERCIVITY FORCE (Hc)	6.5	A/m
REL. TEMP. COEF. (µr) 20-60℃	-0.5 ~ 2.0	$x10^{-6}$/℃
HYSTERESIS MATERIAL CONSTANT (nB) 25℃, 10kz, 1.5~3mT	< 1.4	$x10^{-6}$/mT
CURIE TEMP. (Tc)	> 120	℃
RESISTIVITY (ρ)	0.15	Ω.m
DENSITY (d)	4.9	G/cm^3

METRIC | THIRD ANGLE PROJECTION | NAME (PART NUMBER): P-110001098 | REVISION: 01 | EATON
DESCRIPTION: xSTORAGE 250-2000, SYSTEM ELEVATION | SIZE: A0
DRAWNED BY: S. Davis | 2/5/2024 | SEE NOTES FOR TOLERANCES FOR ONE, 2 & MM (INCHES) AFTER PLATING FOR ONE, 2 & MM (INCHES) | DRAW: RELEASE | SCALE: 0.100
MODIFIED BY: | 11/13/2024 | CO: CO-0359627 | SHEET: 9 OF 9

EATON CORPORATION - CONFIDENTIAL AND PROPRIETARY - REPORT IS RETURNED WITH THE FOLLOWING UNDERSTANDING: THE REPORT AND THE INFORMATION CONTAINED THEREIN IS THE PROPERTY OF EATON CORPORATION. THE REPORT IS TO BE USED ONLY FOR THE PURPOSE FOR WHICH IT WAS SUBMITTED AND IS TO BE RETURNED UPON REQUEST. INFORMATION CONTAINED IN THE REPORT MAY NOT BE DISCLOSED OR REPRODUCED WITHOUT THE WRITTEN CONSENT OF EATON CORPORATION. Copyright © 2024 Eaton Corporation

Figure 97. P-110001098, xStorage 250–1000, System Elevation Drawing — Page 15

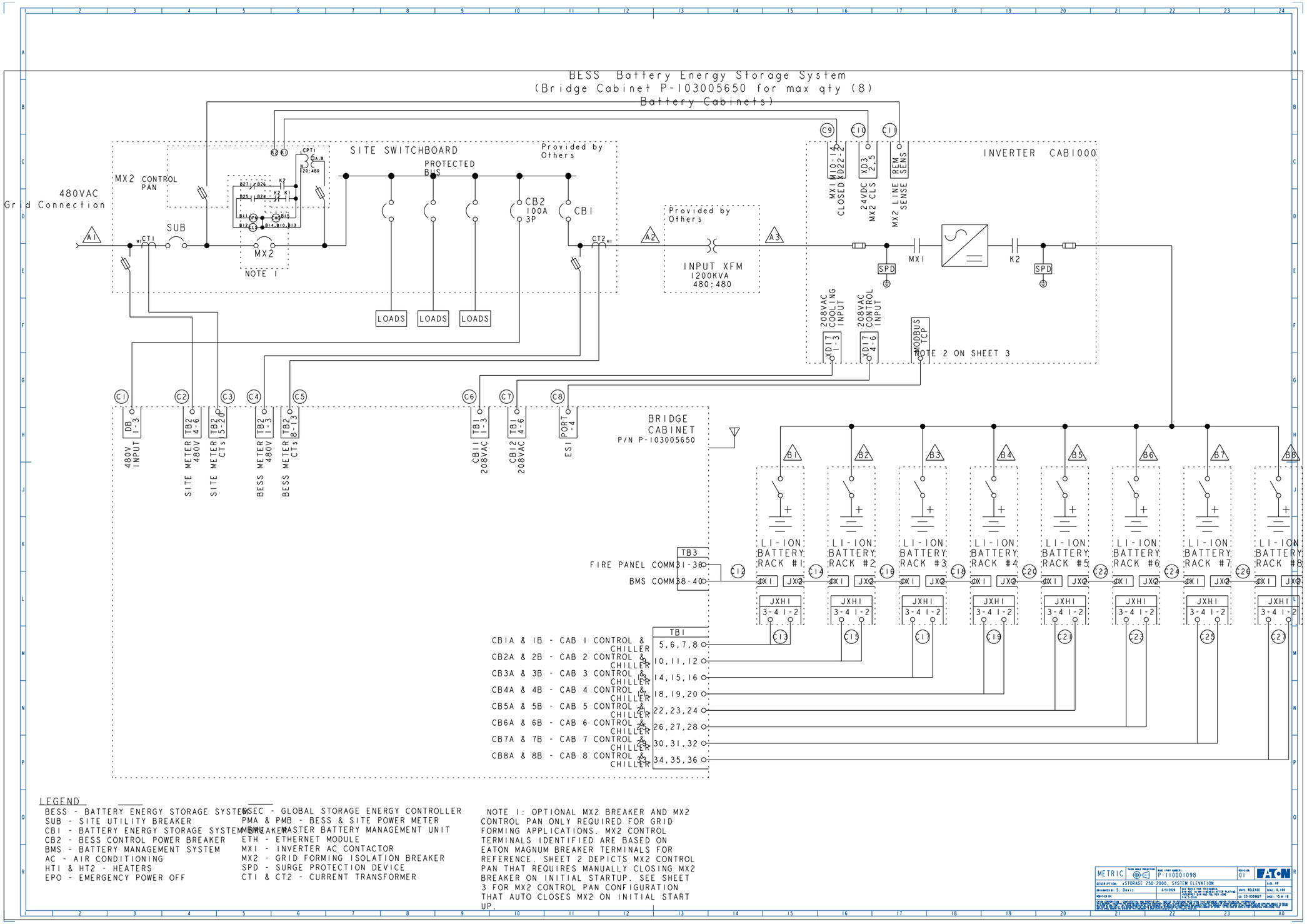

Figure 98. P-110001098, xStorage 250–1000, System Elevation Drawing — Page 16

TABLE D: CONTROL WIRING

CABLE #	CONNECTION	FROM	TO	NOMINAL VOLTAGE	CABLE QTY/AWG (90°C, THHN)	EMT CONDUIT SIZE (in.)	CONDUIT #
C1	CONTROL CABINET INPUT POWER	CONTROL CABINET: DB1, DB2, DB3, GND	SITE SWITCHBOARD: CB2-2, CB2-4, CB2-6, GND	480 VAC	4/C #6	1.25	1
C2	SITE INPUT METER PT	CONTROL CABINET: TB2-4, TB3-5, TB3-6	SITE SWITCHBOARD: SUB LINE SIDE ØA-V, ØB-V, ØC-V	480 VAC	3/C #14	0.75	2
C3	SITE METER CT	CONTROL CABINET: TB2-15, TB2-16, TB2-17, TB2-18, TB2-19, TB2-20	SITE SWITCHBOARD: CT1 ØA-X1, ØA-X2, ØB-X1, ØB-X2, ØC-X1, ØC-X2	480 VAC	6/C #14		
C4	BESS METER PT	CONTROL CABINET: TB2-1, TB3-2, TB3-3	SITE SWITCHBOARD: CB1 LOAD SIDE ØA-V, ØB-V, ØC-V	480 VAC	3/C #14	0.75	3
C5	BESS METER CT	CONTROL CABINET: TB2-8, TB2-9, TB2-10, TB2-11, TB2-12, TB2-13	SITE SWITCHBOARD: CT2 ØA-X1, ØA-X2, ØB-X1, ØB-X2, ØC-X1, ØC-X2	480 VAC	6/C #14		
C6	INVERTER COOLING POWER	CONTROL CABINET: TB1-1, TB1-2, TB1-3	INVERTER: XD17-1, XD17-2, XD17-3	208 VAC	3/C #12	0.50	4
C7	INVERTER CONTROL POWER	CONTROL CABINET: TB1-4, TB1-5, TB1-6	INVERTER: XD17-4, XD17-5, XD17-6	208 VAC	3/C #12		
C8	INVERTER MODBUS TCP (SEE NOTE 2 ON SHEET 9)	BRIDGE CABINET: ES1-4	INVERTER: MODBUS TCP RJ45 PORT	24 VDC	SHIELDED CAT6	0.50	5
C9*	MX1 CLOSE	INVERTER: M10-14, XD22-2	SITE SWITCHBOARD: MX2 CONTROL PAN TB1-15,16	24 VDC	2/C #18	0.50	6
C10*	MX2 CLOSE	INVERTER CAB1000: XD3-2, XD3-5	SITE SWITCHBOARD: MX2 CONTROL PAN TB1-17,18	24 VDC	2/C #18		
C11*	MX2 LINE VOLTAGE SENSE	INVERTER CAB1000: REMOTE SENSE L1, L2, L3	SITE SWITCHBOARD: MX2 CONTROL PAN TB1-11,12,13	480 VAC	3/C #18		
C12	BMS & FIRE PANEL COMMUNICATION	CONTROL CABINET: TB3-31, TB3-32, TB3-33, TB3-34, TB3-35, TB3-36	BATTERY RACK #1: JX3-C, JX3-D, JX3-E, JX3-F, JX3-G, JX3-H	24 VDC	6/C #22	0.75	7
		CONTROL CABINET: TB3-38, TB3-39, TB3-40	BATTERY RACK #1: JX3-A, JX3-B	24 VDC	1/#22 TWISTED PAIR SHIELDED		
C13	BATTERY RACK 1 AUX POWER	CONTROL CABINET: TB1-8, TB1-9, TB1-11, TB1-12	BATTERY RACK #1: JXH1-A, JXH1-B, JXH1-C, JXH1-D	208 VAC	2/C #18 2/C #12	0.50	8
C14	BATTERY RACK 1 TO RACK 2 BMS & FIRE PANEL COMMUNICATION	BATTERY RACK #1: JX2-C, JX2-D, JX2-E, JX2-F, JX2-G, JX2-H	BATTERY RACK #2: JX3-C, JX3-D, JX3-E, JX3-F, JX3-G, JX3-H	24 VDC	6/C #22	0.75	9
		BATTERY RACK #1: JX2-A, JX2-B	BATTERY CABINET #2: JX3-A, JX3-B	24 VDC	1/#22 TWISTED PAIR SHIELDED		
C15	BATTERY RACK 2 AUX POWER	CONTROL CABINET: TB1-14, TB1-15, TB1-17, TB1-18	BATTERY RACK #2: JXH1-A, JXH1-B, JXH1-C, JXH1-D	208 VAC	2/C #18 2/C #12	0.50	10
C16	BATTERY RACK 2 TO RACK 3 BMS & FIRE PANEL COMMUNICATION	BATTERY RACK #2: JX2-C, JX2-D, JX2-E, JX2-F, JX2-G, JX2-H	BATTERY RACK #3: JX3-C, JX3-D, JX3-E, JX3-F, JX3-G, JX3-H	24 VDC	6/C #22	0.75	11
		BATTERY RACK #2: JX2-A, JX2-B	BATTERY RACK #3: JXH1-A, JXH1-B, JXH1-C, JXH1-D	24 VDC	1/#22 TWISTED PAIR SHIELDED		
C17	BATTERY RACK 3 AUX POWER	CONTROL CABINET: TB1-20, TB1-21, TB1-23, TB1-24	BATTERY RACK #3: JXH1-A, JXH1-B, JXH1-C, JXH1-D	208 VAC	2/C #18 2/C #12	0.50	12

* CABLE # C9, C10, C11 ONLY REQUIRED IN GRID FORMING APPLICATIONS. C9 & C10 TO BE 600V RATED IF PLACED IN SINGLE CONDUIT WITH C11.
ADD #18 WIRE JUMPER FROM INVERTER XD22-1 TO M10-13 FOR GRID FORMING APPLICATIONS.

METRIC | THIRD ANGLE PROJECTION | NAME (PART NUMBER): P-110001098 | REVISION: 01 | EATON
DESCRIPTION: xSTORAGE 250-2000, SYSTEM ELEVATION | SIZE: A0
DRAWN BY: S. Davis | 2/5/2020 | SEE NOTES FOR TOLERANCES DIM ARE IN MM UNCOATED/UNPLATED PARTS DEBURR & BREAK EDGES | DATE: RELEASE | SCALE: 0.100
REVIEW BY: | EC: CO-0326627 | WEIGHT: 10 of 18
ENTIRE CONTENTS ... A0

Figure 99. P-110001098, xStorage 250–1000, System Elevation Drawing — Page 17

TABLE E: SYSTEM BREAKER TABLE

SYSTEM (KW)	BREAKER	CURRENT RATING (A)	
		100% RATED	80% RATED
1000	SUB, CB1, MX2*	1600	1600
	CB2	50	60
800	SUB, CB1, MX2*	1000	1200
	CB2	50	60
700	SUB, CB1, MX2*	1000	1200
	CB2	50	60
500	SUB, CB1, MX2*	700	800
	CB2	50	60
350	SUB, CB1, MX2*	500	600
	CB2	50	60
250	SUB, CB1, MX2*	350	400
	CB2	50	60

ALL BREAKERS REQUIRE:
AUX CONTACTS = 2A2B
ALARM CONTACTS = 1A1B

* OPTIONAL MX2 ONLY REQUIRED FOR GRID FORMING APPLICATIONS. BREAKER REQUIRES:
120V SPRING CHARGE
120V SPRING RELEASE (CLOSE OPERATION)
120V SHUNT TRIP (OPEN OPERATION)

TABLE F: INPUT TRANSFORMER TABLE

SYSTEM POWER (KW)	TRANSFORMER RATING (KVA)
850-1000	1200
700-800	1000
450-650	750
300-400	500
250	300

INPUT TRANSFORMER REQUIREMENTS:
480 Y 277 PRI.- 480V DELTA SEC.
ISOLATION TRANSFORMER
TAPS 2 @ +2.5%, 2 @ -2.5%
150°C RISE
ELECTROSTATIC SHIELD

DELTA SECONDARY FACES INVERTER. SEE INVERTER MANUAL FOR ADDITIONAL TRANSFORMER REQUIREMENTS.

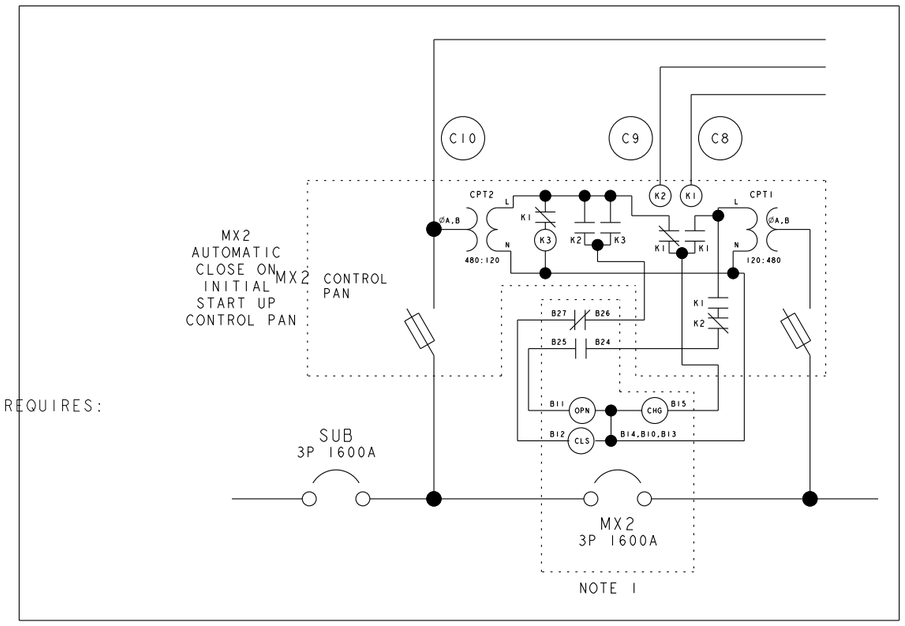

NOTE 1: OPTIONAL MX2 BREAKER AND MX2 CONTROL PAN ONLY REQUIRED FOR GRID FORMING APPLICATIONS. MX2 CONTROL TERMINALS IDENTIFIED ARE BASED ON EATON MAGNUM BREAKER TERMINALS FOR REFERENCE. SHEET 6 DEPICTS MX2 CONTROL PAN THAT REQUIRES MANUALLY CLOSING MX2 BREAKER ON INITIAL STARTUP. SEE SHEET 8 FOR MX2 CONTROL PAN CONFIGURATION THAT AUTO CLOSES MX2 ON INITIAL START UP.

METRIC | P-110001098 | 01 | DESCRIPTION: xSTORAGE 250-2000, SYSTEM ELEVATION | DESIGNED BY: S. Davis | 2/5/2020 | SIZE: A0 | SCALE: 0.100 | SHEET: 17 OF 18

Figure 100. P-110001098, xStorage 250–1000, System Elevation Drawing — Page 18

TABLE G: CUSTOMER INVERTER WIRING

TERMINATION	MAX TERMINATIONS	LUG TYPE	BOLT PATTERN	VOLTAGE RATING
AC INPUT/OUTPUT WIRES (PER PHASE)	6	COMPRESSION 600 MCM MAX CABLE SIZE	NEMA 2 HOLE	600 VAC
GROUND WIRES	14	COMPRESSION	SINGLE HOLE 12 MM DIA.	
CONTROL WIRE	2 TO 18 AWG	SEE MANUAL	SEE MANUAL	SEE MANUAL

TABLE H: CUSTOMER INVERTER TO BATTERY WIRING (PER BATTERY RACK)

WIRES	ACCEPTED WIRE RANGE	TORQUE RATING N*M [LB.FT]	WIRE	CONDUIT
DC INPUT WIRES FROM BATTERY	COMPRESSION TERMINAL (2-HOLE, M12, 44.5MM CENTERS)	76 [56]	(2) 3/0 (Note 1)	(1) 2 in
GROUND WIRES (BATTERY)	COMPRESSION TERMINAL (1-HOLE, M10)	22 [16]	(1) 3/0 (Note 1)	

NOTE 1: DC CABLE 2000V 105°C RATED TYPE XLPE EQUIVALENT TO:
MANF. ADC P/N 30302NPV_ET

METRIC | THIRD ANGLE PROJECTION | NAME (PART NUMBER): P-110001098 | REVISION: 01 | EATON
DESCRIPTION: xSTORAGE 250-2000, SYSTEM ELEVATION | SIZE: A0
DRAWN BY: S. Davis | 2/5/2020 | SEE NOTES FOR TOLERANCES DEBURR, FINISH CONDUCTIVE/ZINC PLATING | STATE: RELEASE | SCALE: 0.100
REVIEWED BY: | | TEXTURE: NONE | SIZE: CD-03306127 | SHEET: 18 of 18

Chapter 9 System Maintenance

The Eaton xStorage 250-1000 is designed to operate for extended periods of time without maintenance. All xStorage 250-1000 maintenance activities are to be performed by authorized service personnel only.

Preventive maintenance is performed per the schedule in paragraph 9.2 *Preventive Maintenance Schedule*; corrective maintenance is performed on an as-needed basis.

9.1 Important Safety Instructions

Due to the presence of batteries, the xStorage 250-1000 is unsafe until the DC power source is disconnected, and the inverter electrolytic capacitors are discharged. After disconnecting the utility power and the DC power, authorized service personnel must wait for at least five minutes to allow capacitors to bleed off before attempting to access any part of the system.

NOTICE

Servicing and maintenance should be performed by qualified service personnel only.

⚠WARNING

Because each battery string is an energy source, opening the battery isolation switch does not de-energize the voltage within the battery string. DO NOT ATTEMPT TO ACCESS THE BATTERY MODULE CHAMBER YOURSELF. VOLTAGES ARE ALWAYS PRESENT IN THE BATTERY STRING. If you suspect that a battery string needs service, contact an Eaton service representative.

9.2 Preventive Maintenance Schedule

To ensure reliable operation, the inverter and battery cooling inlet and outlet clearances must be kept clear as described in 3.3.2 *Installation Considerations and Exposures*. Do not permit obstructions (equipment, vehicles, snow) to block these areas. Preventive maintenance procedures are recorded in the Service Manual. The table below contains the preventive maintenance activities for the xStorage 250-1000.

Table 54. Maintenance Schedule

Periodicity	Activity	Details
Quarterly	Visual Inspection	Inspect general condition of exterior of enclosures
	Filter Inspection	Inspect inlet and exhaust filters on inverter
	Heat Exchanger Inspection	Inspect inverter radiator fins and condition of axial fan
	Battery Inspection	Inspect the battery modules contained in control cabinet fire control panel for corrosion or damage to harness
	Heater Inspection	Inspect and validate function of heater thermostat
Annually	Coolant Inspection	Inspect coolant level and condition of seals of battery and inverter cooling loops
	Moisture	Inspect for moisture ingress in enclosures
	Torque	Check torque on power connections in inverter and control cabinet

Chapter 10 Product Specifications

This chapter provides the following specifications:

- Models
- Input Specifications
- Output Specifications
- Environmental and Safety Specifications
- Battery and Inverter Characteristics

10.1 Models (CTO)

The Eaton xStorage 250-1000 is available in multiple specifications per the CTO table below.

Figure 101. xStorage 250–1000 CTO Chart — Models — Page 1

1		2		3	4		5			6		7		8			9		10		11		12		13		14		15			
System		Location		Max Rating			Battery Capacity			Voltage/Frequency		Grid Application		MX2 Controll Panel			Controls Cabinet		Inverter Cabinet		Future Use		Future Use		Future Use		Future Use		Battery Cabinet			
						kW	Battery Cabinets	kWh when digit 15 = 1	kWh when digit 15 = 2						Part Number	Description														Part Number	Description	kWh
B	xStorage	0	US	2	5	250	1	372.7	379.4	0	480V 60Hz 3 Wire	0	Standard	0	None	No Grid-Forming	0	P-103004900	0	50-100181	0	Standard	0	Standard	0	Standard	0	Standard	1	O852280-P	EnerOne	372.7
		1	Canada - not available	3	0	300	1	372.7	379.4			1	Microgrid	1	P-103005214-001	Grid-Forming (Auto)	1	P-103005650											2	R08285P10L31	EnerOne+	379.4
				3	5	350	1	372.7	379.4					2	P-103005214-002	Grid-Forming (Manual)																
				2	5	250	2	745.4	758.8																							
				3	0	300	2	745.4	758.8																							
				3	5	350	2	745.4	758.8																							
				4	0	400	2	745.4	758.8																							
				4	5	450	2	745.4	758.8																							
				5	0	500	2	745.4	758.8																							
				5	5	550	2	745.4	758.8																							
				6	0	600	2	745.4	758.8																							
				6	5	650	2	745.4	758.8																							
				7	0	700	2	745.4	758.8																							
				2	5	250	3	1118.1	1138.2																							
				3	0	300	3	1118.1	1138.2																							
				3	5	350	3	1118.1	1138.2																							
				4	0	400	3	1118.1	1138.2																							
				4	5	450	3	1118.1	1138.2																							
				5	0	500	3	1118.1	1138.2																							
				5	5	550	3	1118.1	1138.2																							
				6	0	600	3	1118.1	1138.2																							
				6	5	650	3	1118.1	1138.2																							
				7	0	700	3	1118.1	1138.2																							
				7	5	750	3	1118.1	1138.2																							
				8	0	800	3	1118.1	1138.2																							
				8	5	850	3	1118.1	1138.2																							
				9	0	900	3	1118.1	1138.2																							
				9	5	950	3	1118.1	1138.2																							
				A	0	1000	3	1118.1	1138.2																							
				2	5	250	4		1517.6																							
				3	0	300	4		1517.6																							
				3	5	350	4		1517.6																							
				4	0	400	4		1517.6																							
				4	5	450	4		1517.6																							
				5	0	500	4		1517.6																							
				5	5	550	4		1517.6																							
				6	0	600	4		1517.6																							
				6	5	650	4		1517.6																							
				7	0	700	4		1517.6																							
				7	5	750	4		1517.6																							

Figure 102. xStorage 250–1000 CTO Chart — Models — Page 2

1	2	3	4		5			6	7	8			9	10	11	12	13	14	15		
System	Location	Max Rating			Battery Capacity			Voltage/Frequency	Grid Application	MX2 Controll Panel			Controls Cabinet	Inverter Cabinet	Future Use	Future Use	Future Use	Future Use	Battery Cabinet		
				kW	Battery Cabinets	kWh when digit 15 = 1	kWh when digit 15 = 2				Part Number	Description							Part Number	Description	kWh
		8	0	800	4		1517.6														
		8	5	850	4		1517.6														
		9	0	900	4		1517.6														
		9	5	950	4		1517.6														
		A	0	1000	4		1517.6														
		2	5	250	5		1897.0														
		3	0	300	5		1897.0														
		3	5	350	5		1897.0														
		4	0	400	5		1897.0														
		4	5	450	5		1897.0														
		5	0	500	5		1897.0														
		5	5	550	5		1897.0														
		6	0	600	5		1897.0														
		6	5	650	5		1897.0														
		7	0	700	5		1897.0														
		7	5	750	5		1897.0														
		8	0	800	5		1897.0														
		8	5	850	5		1897.0														
		9	0	900	5		1897.0														
		9	5	950	5		1897.0														
		A	0	1000	5		1897.0														
		2	5	250	6		2276.4														
		3	0	300	6		2276.4														
		3	5	350	6		2276.4														
		4	0	400	6		2276.4														
		4	5	450	6		2276.4														
		5	0	500	6		2276.4														
		5	5	550	6		2276.4														
		6	0	600	6		2276.4														
		6	5	650	6		2276.4														
		7	0	700	6		2276.4														
		7	5	750	6		2276.4														
		8	0	800	6		2276.4														
		8	5	850	6		2276.4														
		9	0	900	6		2276.4														
		9	5	950	6		2276.4														
		A	0	1000	6		2276.4														
		2	5	250	7		2655.8														
		3	0	300	7		2655.8														
		3	5	350	7		2655.8														
		4	0	400	7		2655.8														
		4	5	450	7		2655.8														
		5	0	500	7		2655.8														

Figure 103. xStorage 250–1000 CTO Chart — Models — Page 3

1	2	3	4	5			6	7	8			9	10	11	12	13	14	15		
System	Location	Max Rating		Battery Capacity			Voltage/Frequency	Grid Application	MX2 Controll Panel			Controls Cabinet	Inverter Cabinet	Future Use	Future Use	Future Use	Future Use	Battery Cabinet		
			kW	Battery Cabinets	kWh when digit 15 = 1	kWh when digit 15 = 2				Part Number	Description								Part Number	Description	kWh
		5	5	550	7		2655.8													
		6	0	600	7		2655.8													
		6	5	650	7		2655.8													
		7	0	700	7		2655.8													
		7	5	750	7		2655.8													
		8	0	800	7		2655.8													
		8	5	850	7		2655.8													
		9	0	900	7		2655.8													
		9	5	950	7		2655.8													
		A	0	1000	7		2655.8													
		2	5	250	8		3035.2													
		3	0	300	8		3035.2													
		3	5	350	8		3035.2													
		4	0	400	8		3035.2													
		4	5	450	8		3035.2													
		5	0	500	8		3035.2													
		5	5	550	8		3035.2													
		6	0	600	8		3035.2													
		6	5	650	8		3035.2													
		7	0	700	8		3035.2													
		7	5	750	8		3035.2													
		8	0	800	8		3035.2													
		8	5	850	8		3035.2													
		9	0	900	8		3035.2													
		9	5	950	8		3035.2													
		A	0	1000	8		3035.2													

Cells shaded this color denote configurations not available at this time

Highlighted boxes denote configurations changed / modified from previous revision

CTO CHART, xSTORAGE BESS CTO

CREATED BY:	DATE CREATED:	CO #:
D, Lahti	4/21/2026	CO-0364719
MODIFIED BY:	DATE MODIFIED:	REVISION:
D, Lahti	5/15/2026	02
SHEET:	P-110001125	
1 of 1		

EATON CORPORATION - CONFIDENTIAL AND PROPRIETARY
NOTICE TO PERSONS RECEIVING THIS DOCUMENT AND/OR TECHNICAL INFORMATION
THIS DOCUMENT, INCLUDING THE DRAWING AND INFORMATION CONTAINED THEREON, IS CONFIDENTIAL AND IS THE EXCLUSIVE PROPERTY OF EATON CORPORATION, AND IS MERELY ON LOAN AND SUBJECT TO RECALL BY EATON AT ANY TIME.
BY TAKING POSSESSION OF THIS DOCUMENT, THE RECIPIENT ACKNOWLEDGES AND AGREES THAT THIS DOCUMENT CANNOT BE USED IN ANY MANNER ADVERSE TO THE INTERESTS OF EATON, AND THAT NO PORTION OF THIS DOCUMENT MAY BE COPIED OR OTHERWISE REPRODUCED WITHOUT THE PRIOR WRITTEN CONSENT OF EATON.
IN THE CASE OF CONFLICTING CONTRACTUAL PROVISIONS, THIS NOTICE SHALL GOVERN THE STATUS OF THIS DOCUMENT.
© 2025 Eaton Corporation – All Rights Reserved.

10.2 Input Specifications

Table 55. Input Specifications

Operating Input Voltage	Minimum: 432 VAC Nominal: 480 VAC Maximum: 528 VAC
Operating Input Frequency	60 Hz
AC Max Continuous Input Current	1203 A
Maximum Power: Input	1000kW
Input Short Circuit Rating	200KA
Number of Phases	3ϕ + GND, No Neutral

10.3 Output Specifications

Table 56. Output Specifications

Operating Output Voltage	Minimum: 432 VAC Nominal: 480 VAC Maximum: 528 VAC
Operating Output Frequency	60 Hz
AC Max Continuous Output Current	1203 A
Maximum Power: Output	1000kW
Inverter Output Short Circuit Max Contribution	4200A
Overload Capability	115 % for 2 seconds 105 % for 5 min

10.4 Environmental Specifications

Table 57. Environmental Specifications

Operating Temperature	-20C to 50C Energy output de-rate required for temperatures above 40C
Operating Altitude	1000 meters above sea level at 40°C maximum Above this level, up to 2000 meters, rated power is de-rated to 90%.

Table 57. Environmental Specifications (Continued)

Storage Temperature	Inverter: -40C to 60C Battery: -40C to 60C Control Cabinet: 0 to 35C
Environmental Rating	System Rating: **Outdoor** Derived from Inverter: IP 55|NEMA 3R Battery: IP 66 Control Cabinet: IP 66|NEMA 3R Auxiliary Transformer: NEMA 3R 95% Relative Humidity, Non-Condensing

10.5 Battery Characteristics

Table 58. Battery Characteristics

Battery Type	**Lithium Ion (LFP), 1C**
Number of Modules (Each Rack)	8
Battery Voltage	Minimum: 1040 VDC Nominal: 1331.2 VDC Maximum: 1500 VDC
Battery Power (Per Rack)	379.4kW
Battery Energy (Per Rack)	379.4kWh
SoC Boundaries	5% - 95%
DC Current (Per Rack)	Nominal: 285A Maximum: 364.8A

10.6 End User Agreement

Eaton End-User License Agreement

IMPORTANT, READ CAREFULLY. THIS END USER LICENSE AGREEMENT (THE “AGREEMENT”) IS A BINDING CONTRACT BETWEEN YOU, THE END-USER (THE “LICENSEE”) AND EATON INTELLIGENT POWER LIMITED, IRELAND, OR ONE OF ITS AFFILIATES (“EATON” OR “LICENSOR”). BY OPERATING THIS UNINTERRUPTIBLE POWER SUPPLY (UPS) PRODUCT INCLUDING SOFTWARE EMBEDDED IN IT (FIRMWARE), YOU, THE LICENSEE, ARE AGREEING TO BE BOUND BY THE TERMS, CONDITIONS, AND LIMITATIONS OF THIS AGREEMENT. READ THE TERMS AND CONDITIONS OF THIS AGREEMENT CAREFULLY BEFORE, INSTALLING OR OPERATING THE PRODUCT. IF YOU DO NOT AGREE TO THE TERMS OF THIS AGREEMENT, PROMPTLY RETURN THE UNUSED PRODUCT TO EATON.

1.0 DEFINITIONS

1.1 Documentation. “Documentation” means the user guides and manuals for the installation and use of the UPS, whether made available over the internet, provided in CD-ROM, DVD, hard copy or other form.

1.2 Firmware. “Firmware” means software programs that are embedded in the product for which Licensee is granted a license hereunder, the Documentation therefore and, to the extent available, Updates thereto. The Firmware is licensed hereunder in object code (machine readable) form only except that certain software programs may include limited portions in source code (human-readable) form.

1.3 Update. "Update" means a subsequent release of the Firmware, if and when developed by Eaton. An Update does not include any release, new version, option, or future product, which Eaton licenses separately.

2.0 FIRMWARE LICENSE

2.1 Ownership. Eaton or its third party licensors retains all title, copyright and other proprietary rights in, and ownership of the Firmware regardless of the media upon which the original or any copy may be recorded or fixed.

2.2 License Grant. Eaton grants to Licensee a limited, revocable, non-exclusive, non-assignable license to use the Firmware in conjunction with the operation of the product to which the Firmware pertains or other products as described by Eaton in the Documentation. Licensee does not acquire any rights, express or implied, other than those expressly granted in this Agreement.

2.3 Restrictions and Requirements. Licensee will not, nor will it permit others to, modify, adapt, translate, reverse engineer, decompile, or disassemble the Firmware or any component thereof (including the Documentation), or create derivative works based on the Firmware (including the Documentation), except to the extent such foregoing restriction is prohibited by applicable law or applicable open source license to, and only to, any open source software component that is incorporated into the Firmware (if any). Copyright laws and international treaties protect the Firmware, including the Documentation. Unauthorized copying of the Firmware, the Documentation or any part thereof, is expressly prohibited. For avoidance of doubt, Eaton does not grant Licensee a license to any of Eaton's brands, logos, designs, trade dress, service marks, trademarks, domain names or trade names, in whole or in part. Licensee agrees to install or allow installation of all corrections of substantial defects, security patches, minor bug fixes and updates, including any enhancements, for the Firmware in accordance with the instructions and as directed by Eaton.

2.4 Transfer and Assignment Restrictions. Licensee will not sell, resell, assign, lease, sublicense, encumber, or otherwise transfer its interest in this Agreement or in the Firmware, or the Documentation in whole or in part, or allow any other person or entity, including any parent or subsidiary of Licensee or other subsidiary of Licensee's parent, to copy, distribute, or otherwise transfer the Firmware without the prior written consent of Eaton. Licensee may transfer the Firmware directly to a third party only in connection with the sale of the Eaton product in which it is installed.

3.0 TERMINATION

3.1 Termination. This Agreement and the license granted hereunder automatically terminates if Licensee breaches any provision of this Agreement. Eaton may terminate this license at any time with or without cause.

3.2 Effect of Termination. Immediately upon termination of this Agreement or the license granted hereunder, Licensee will cease using the product. The parties' rights and obligations under the following sections of this Agreement will survive termination of this Agreement: Article 1.0, Section 2.1, Section 2.3, Section 2.4, Article 3.0, Article 4.0 and Article 5.0.

4.0 INFRINGEMENT AND WARRANTIES

4.1 Infringement. If Licensee learns of a threat, demand, allegation, or indication that the UPS with its firmware infringes or misappropriates any third party intellectual property rights (including but not limited to any patent, copyright, trademark, trade dress, or trade secret) ("Intellectual Property Claim"), Licensee will notify Eaton promptly of such claim. Eaton may, in its sole discretion, elect to assume sole control of the defense and settlement of said Intellectual Property Claim and Licensee will provide reasonable information and assistance to Eaton for the defense of such claim.

4.2 Disclaimer of Warranties. THE FIRMWARE IS PROVIDED "AS IS" WITHOUT WARRANTY OF ANY KIND, . EATON DOES NOT WARRANT THAT THE FIRMWARE WILL BE ERROR-FREE OR SECURE FROM UNAUTHORIZED ACCESS. THE LICENSEE EXPRESSLY ACKNOWLEDGES THAT TO THE EXTENT PERMITTED BY APPLICABLE LAW, THE USE OF THE PRODUCT IS AT LICENSEE'S SOLE RISK.

5.0 GENERAL PROVISIONS

5.1 Update Policy. Eaton may from time to time, but has no obligation to, create Updates of the Firmware or components thereof.

5.2 Limitation on Liability. NOTWITHSTANDING ANY PROVISION OF THIS AGREEMENT TO THE CONTRARY, LICENSEE EXPRESSLY UNDERSTANDS AND AGREES THAT EATON, ITS AFFILIATES, AND ITS LICENSORS, WILL NOT BE LIABLE FOR: (A) ANY DIRECT, INDIRECT, INCIDENTAL, SPECIAL, CONSEQUENTIAL OR EXEMPLARY DAMAGES WHICH MAY BE INCURRED BY LICENSEE OR ANY THIRD PARTY, HOWEVER CAUSED AND UNDER ANY THEORY OF LIABILITY. THIS WILL INCLUDE, BUT NOT BE LIMITED TO, ANY LOSS OF PROFIT (WHETHER INCURRED DIRECTLY OR INDIRECTLY), ANY LOSS OF GOODWILL OR BUSINESS REPUTATION, ANY LOSS OF DATA SUFFERED, COST OF PROCUREMENT OF SUBSTITUTE GOODS OR SERVICES, OR OTHER INTANGIBLE LOSS; (B) ANY LOSS OR DAMAGE WHICH MAY BE INCURRED BY LICENSEE OR ANY THIRD PARTY. THESE LIMITATIONS ON EATON'S LIABILITY WILL APPLY WHETHER OR NOT EATON HAS BEEN ADVISED OF OR SHOULD HAVE BEEN AWARE OF THE POSSIBILITY OF ANY SUCH LOSSES ARISING. TO THE EXTENT PERMITTED BY LAW, THE TOTAL LIABILITY OF EATON, ITS AFFILIATES, AND ITS LICENSORS, FOR ANY CLAIMS UNDER THESE TERMS, INCLUDING FOR ANY IMPLIED WARRANTIES, IS LIMITED TO THE AMOUNT PAID FOR THE UPS. THIS SECTION 5.2 STATES EATON'S ENTIRE LIABILITY AND LICENSEE'S SOLE AND EXCLUSIVE REMEDY UNDER THIS AGREEMENT, AND IS SUBJECT TO ALL LIMITATIONS STATED IN SECTION 4.2.

5.3 Notices. All notices required to be sent hereunder will be in writing and will be deemed to have been given when mailed by first class mail to the address shown below:

LICENSE NOTICES:
Eaton Intelligent Power Limited
Eaton House,
30 Pembroke Road,
Dublin 4, D04 Y0C2,
Ireland

5.4 Severability. If any provision of this Agreement is held to be invalid or unenforceable, the remaining provisions of this Agreement will remain in full force.

5.5 Waiver. The waiver by either party of any default or breach of this Agreement will not constitute a waiver of any other or subsequent default or breach. Failure to enforce or delay in enforcing any provision of this Agreement will not constitute a waiver of any rights under any provisions of this Agreement.

5.6 Entire Agreement. This Agreement constitutes the complete agreement between the parties and supersedes all prior or contemporaneous agreements or representations, written or oral, concerning the subject matter of this Agreement. This Agreement may not be modified or amended except in a writing specifically referencing this Agreement and signed by a duly authorized representative of each party. No other act, document, usage or custom will be deemed to amend or modify this Agreement. The Firmware, or portions thereof, may also be subject to additional paper or electronic license agreements. In such cases, the terms of this Agreement will be supplemental to those in the additional agreements, to the extent not inconsistent with the additional agreements. If a copy of this Agreement in a language other than English is included with the Firmware or Documentation, it is included for convenience and the English language version of this Agreement will control.

5.7 Heirs, Successors, and Assigns. Each and all of the covenants, terms, provisions and agreements herein contained will be binding upon and inure to the benefit of the parties hereto and, to the extent expressly permitted by this Agreement, their respective heirs, legal representatives, successors and assigns.

5.8 Export Restrictions. Licensee agrees to comply fully with all relevant export laws and regulations of the United States and all other countries in the world (the "Export Laws") to assure that neither the Firmware nor any direct product thereof are (I) exported, directly or indirectly, in violation of Export Laws; or (ii) are intended to be used for any purposes prohibited by the Export Laws. Without limiting the foregoing, Licensee will not export or re-export the Firmware: (i) to any country to which the U.S. has embargoed or restricted the export of

goods or services (see http://www.treasury.gov/resource-center/sanctions/ Programs/Pages/ Programs.aspx), or to any national of any such country, wherever located, who intends to transmit or transport the Firmware back to such country; (ii) to any end user who Licensee knows or has reason to know will utilize the Firmware in the design, development or production of nuclear, chemical or biological weapons; or (iii) to any end-user who has been prohibited from participating in U.S. export transactions by any federal agency of the U.S. government.

5.9 U.S. Government Restricted Rights. The Firmware is a "commercial item" as that term is defined at 48 C.F.R. § 2.101, consisting of "commercial computer software" and "commercial computer software documentation", as such terms are used in 48 C.F.R. § 12.212, and is provided to the U.S. Government only as a commercial end item. Consistent with 48 C.F.R. § 12.212 and 48 C.F.R. §§ 227.7202-1 through 227.7202-4, all U.S. Government End Users acquire the Firmware with only those rights set forth herein. Contractor/ manufacturer is Eaton Corporation, 1000 Eaton Boulevard, Cleveland, Ohio 44122.

5.10 Third Party Intellectual Property Rights. The Firmware may contain components (including open source software components) that are owned by third parties ("Third Party Licensors") and are provided with, incorporated into, or embedded in, the Firmware pursuant to license arrangements between Eaton and such third parties. Third Party Licensor components in the Firmware are not licensed or warranted under the terms of this document, but are instead subject to the Third Party Licensors' license agreements. Licensee will not modify, delete, or obfuscate any copyright or other proprietary rights notices of Third Party Licensors contained in the Firmware.

5.11 Indemnity. Licensee shall defend, indemnify and hold Eaton and its officers, directors, employees, and agents harmless from and against all losses, damages, liabilities, claims, actions, and associated costs and expenses (including reasonable attorneys' fees and expenses) by reason of injury or death to any person or damage to any tangible or intangible property arising or resulting from the negligence or willful misconduct of the Licensee, its employees, contractors, or agents, in connection with Licensee's use of Firmware and Documentation. Licensee shall be responsible for any breach of this Agreement by its officers, directors, employees, contractors, or agents. Licensee shall defend, indemnify, and hold Eaton and its officers, directors, employees, and agents harmless from and against any and all losses, damages, liabilities, claims, actions, and associated costs and expenses (including reasonable attorneys' fees and expenses) arising out of or in connection with any breach of this Agreement.

5.12 Open Source Software. The Firmware may contain certain components owned by Eaton that are provided with, incorporated into, linked to, or embedded in the Firmware that are subject to third party open source licenses ("Eaton Open Source Components"). Eaton OpenSource Components are subject to the open source licenses corresponding to the particular software component. To the extent there are any conflicts between the terms of this Agreement and any open source license corresponding to Eaton Open Source Components or additional obligations by such open sources license that are not set forth in this Agreement, the terms of the open source license will control.

5.13 Confidentiality. Licensee acknowledges that confidential aspects of the Firmware (including any proprietary source code) are a trade secret of Eaton, the disclosure of which would cause substantial harm to Eaton that could not be remedied by the payment of damages alone and such confidential aspects of the Firmware shall not be disclosed to third parties without the prior written consent of Eaton. Accordingly, Eaton will be entitled to preliminary and permanent injunctive and other equitable relief for any breach of this Section 5.13.

5.14 Note on JAVA Support. The Firmware may contain support for programs written in JAVA. JAVA technology is not fault tolerant and is not designed, manufactured, or intended for use or resale as online control equipment in hazardous environments requiring fail-safe performance, such as in the operation of nuclear facilities, aircraft navigation or communications systems, air traffic control, direct life support machines, or weapons systems, in which the failure of JAVA technology could lead directly to death, personal injury, or severe physical or environmental damage. EATON DISCLAIMS ALL DAMAGES INCLUDING DIRECT, INDIRECT AND CONSEQUENTIAL DAMAGES RELATING TO THE FAILURE OF ANY SOFTWARE INCLUDING JAVA PROGRAMS AND/OR JAVA TECHNOLOGY.

5.15 Governing Law. This Agreement will be interpreted and enforced in accordance with the laws of Ireland, without regard to choice of law principles. Any claim or suit with respect to this Agreement shall be brought in the Courts of Ireland, unless mandatory law imposes otherwise.

Chapter 11 Warranty

To view the Eaton xStorage 250-1000 warranty please click on the link or copy the address to download from the Eaton website: Eaton Three Phase Product Warranty

https://www.eaton.com/content/dam/eaton/products/backup-power-ups-surge-it-power-distribution/backup-power-ups/portfolio/eaton-three-phase-ups-warranty.pdf

Chapter 12 Appendix

12.1 Battery Safety Data Sheets

For battery disposal instructions. The following content is an excerpt from the CATL MSDS document.

CATL Contemporary Amperex Technology Co. ,Limited
No.2 Xingang Road, Zhangwan Town, Jiaocheng District, Ningde City, Fujian Province, P.R.C., 352100

SAFETY DATA SHEET

Issue No.: 2023-A Doc No.: 2023-A-166 Issue Date: 3/31/2023

1. Product & Company Identification

Product description	Lithium Ion Battery	**CATL model name**	R08285P10L31
Manufacturer	Contemporary Amperex Technology Co. , Limited	**Approximate weight**	3650±100Kg
Nominal capacity	285Ah	**Nominal voltage**	1331.2V
Address	No.2 Xingang Road, Zhangwan Town, Jiaocheng District, Ningde City, Fujian Province, P.R.C., 352100		
Emergency telephone	+86-593-2583668		

2. Hazardous Identification

Lithium ion batteries described in this SDS are hermetically sealed and designed to withstand temperatures and pressures encountered during normal use. Under normal conditions of use, there is no physical danger of ignition, explosion or chemical danger of hazardous materials leakage. The materials contained in this battery may only represent a hazard if the integrity of the battery is compromised or if the battery is mechanically, thermally or electrically abused.

· **Hazard pictograms**

N/A.

· **Hazard statements**

N/A.

· **Precautionary statements**

N/A.

· **Other hazards**

Human health hazard: Electrolyte of the battery may irritate skin and eyes. In the event of a battery rupture, electrolyte fumes/gases can cause serious damage to the eye and cause sensitization and irritation to the respiratory tract.

3. Composition /Information on Ingredients

Composition of battery

Material or ingredient	CAS No./EC No.	Hazard pictograms & statements	%/wt.
Graphite	CAS# 7782-42-5 EC# 231-955-3	Not established	7-25

Page 1 of 7

CATL Contemporary Amperex Technology Co. ,Limited
No.2 Xingang Road, Zhangwan Town, Jiaocheng District, Ningde City, Fujian Province, P.R.C., 352100

SAFETY DATA SHEET

Issue No.: 2023-A Doc No.: 2023-A-166 Issue Date: 3/31/2023

Lithium iron Phosphate	CAS# 15365-14-7 EC# 476-700-9	Not established	15-40
Polyvinylidene Fluoride	CAS# 24937-79-9 EC# 607-458-6	Not established	0-5
Acetylene black (Carbon black)	CAS# 1333-86-4 EC# 215-609-9	Not established	0-2
Copper	CAS# 7440-50-8 EC# 231-159-6	Not established	10-12
Aluminum	CAS# 7429-90-5 EC# 231-072-3	Not established	3-5
Carboxymethylcellulose Sodium	CAS# 9004-32-4 EC# 618-378-6	Not established	0-5
Electrolyte			
Lithium Hexafluorophosphate	CAS# 21324-40-3 EC# 244-334-7	Acute Tox. 3, H311 Skin Corr. 1A, H314 Acute Tox. 4, H302 STOT RE 1，H372	0-5
Dimethyl Carbonate	CAS# 616-38-6 EC# 210-478-4	Inflammable，H225	0-15
Ethylene Carbonate	CAS# 96-49-1 EC# 202-510-0	Eye Irrit. 2, H319 Acute Tox. 4,H312	0-15
Diethyl Carbonate	CAS# 105-58-8 EC#203-311-1	Flam. Liq. 3, H226	0-15
Ethyl Methyl Carbonate	CAS# 623-53-0 EC# 613-014-2	Inflammable，H225 Skin Irrit .2, H315	0-15

4. First Aid Measures

Under normal conditions of use, the battery is hermetically sealed.

Ingestion: Drink plenty of water and induce vomiting. Seek medical attention immediately.

Inhalation: Leave area immediately and seek medical attention.

Skin contact: Remove contaminated clothing. Wash the area with soap and plenty of water immediately and for at least 15minutes. Seek medical attention immediately.

Eye contact: Flush with plenty of water for at least 15 minutes (eyelids held open). Seek medical attention immediately.

5. Fire Fighting Measures

5.1 Hazards analysis (electric shock, fire, explosion, environment pollution)

The voltage of the cell or module is less than 50V (safe voltage), there is no hazard of electric shock. The voltage of the pack is much more than 50 V (safe voltage), and there is a hazard of electric shock.

CATL Contemporary Amperex Technology Co. ,Limited
No.2 Xingang Road, Zhangwan Town, Jiaocheng District, Ningde City, Fujian Province, P.R.C., 352100

SAFETY DATA SHEET

Issue No.: 2023-A Doc No.: 2023-A-166 Issue Date: 3/31/2023

During transportation, the pack may be dropped, crushed, punctured, metal short-circuited, water immersed, etc., which may cause electric shock and fire.

When the electrolyte of the battery leaks, there is a danger of explosion. In addition, improper disposal will also cause environmental pollution.

5.2 Fire fighting measures

Extinguishing media: Plenty of water, carbon dioxide gas, chemical powder, foam fire extinguishing.

Fire fighting procedures: Use a positive pressure self-contained breathing apparatus if batteries are involved in fire. Full protective clothing is necessary. During water application, caution is advised as burning pieces of flammable particles may be ejected from the fire.

Hazardous combustion products: Fire, excessive heat and/or over voltage conditions may produce hazardous decomposition products (i.e. electrolyte fumes and hazardous organic vapors). Vapors may be heavier than air and may travel the ground or be moved by ventilation to an ignition source.

6. Accidental Release Measures

If the internal material of the battery leaks, the relevant emergency measures for leaks are as follows：

Emergency procedures： Rapidly evacuate people from the contaminated area to a safe area and isolate and strictly limit access.Cut off the source of ignition and the source of leakage as far as possible.

Personal protective measures, protective equipment: It is recommended that emergency personnel wear self-contained positive pressure respirators, protective glasses, firefighting suits and do not come into direct contact with the spill.

Environmental protection measures: May be harmful to aquatic life, prevent entry into restricted spaces such as sewers and flood drains.

Electrolyte clean-up method：

Small spill: Absorb spill residue with sand, vermiculite or other inert materials, collect and transport to an open area for burial, evaporation, or burning.

Large spill: Construct an embankment or dig a pit to receive it. Cover with foam to reduce vapour hazard. Transfer to a tanker or special collector with an explosion-proof pump for recycling or transport to a waste disposal site.

7. Handling & Storage

Handling: Do not open or disassemble the batteries. Do not exposure the batteries to fire or store near open flame. Do not mix batteries of varying size or chemicals. Do not connect the positive and negative

battery terminals with conductive material or throw into fire. Do not heat or solder the batteries. Do not expose batteries to direct sun light for a prolonged time.

Storage: Batteries should be stored in a well ventilated, cool area with sufficient clearance between batteries and walls. Store the batteries in a cool (below 30℃) area and away from moisture. Keep the batteries away from sources of heat, open flames, food and drink. Do not store the batteries above 55℃ or below -30℃. Storing at elevated temperatures may reduce the life of batteries. Keep batteries away from strong oxidizers and acids. Elevated temperature storage such as 100℃ may result in battery venting flammable liquid and gases.

8. Exposure Control & Personal Protection

No engineering controls are required for normal operation. In case of electrolyte of the battery leakage, increase the ventilation and use self-contained full-face respiratory equipment.

Person protective equipment: Not required during normal use of the battery, in the event of a raptured battery or fire:

Respiratory protection: Self-contained full-face respiratory equipment.

Hand protection: Chemical protective gloves.

Eye protection: Self-contained full-face respiratory equipment.

Skin and body protection: Chemical-protective clothing.

9. Physical & Chemical Properties

State	Solid
Odor	N/A
Vapor pressure	N/A
Vapor density	N/A
Boiling point	N/A
Solubility in water	Insoluble
Specific gravity	N/A
Density	N/A

10. Stability & Reactivity

Stability: Stable under normal conditions.

Reactivity: When a battery is exposed to high temperatures, crushes, deformation, and external short circuit may result in venting harmful gases and volatile organics. In the event of rupture, hydrogen fluoride gas is produced in reaction with water.

CATL Contemporary Amperex Technology Co. ,Limited
No.2 Xingang Road, Zhangwan Town, Jiaocheng District, Ningde City, Fujian Province, P.R.C., 352100

SAFETY DATA SHEET

Issue No.: 2023-A Doc No.: 2023-A-166 Issue Date: 3/31/2023

11. Toxicological Information

There is no available data for the product itself. The information for the internal cell materials are as follows:

Irritancy: The electrolytes contained in the battery can irritate eyes with any contact. Prolonged contact with skin or mucus membrane may cause irritation.

Sensitization: The nervous system of respiratory organs may be stimulated sensitively.

Carcinogenicity: No information is available at this time.

Reproductive toxicity: No information is available at this time.

Teratogenicity: No information is available at this time.

Mutagenicity: No information is available at this time.

12. Ecological Information

When properly used and disposed, the battery does not present environmental hazard. Do not let internal components enters marine environment. Avoid releasing to water ways, wastewater or ground water.

13. Disposal Considerations

Batteries should be discharged fully prior to disposal. The battery terminals should be capped to prevent a short circuit. Disposal the batteries in accordance with applicable local laws. Lithium-ion batteries may be subjected to federal, state or local regulations.

14. Transport Information

Land transport: International Carriage of Dangerous Goods by Road(ADR 2023), Regulations Concerning the International Carriage of Dangerous Goods by Rail（RID 2021）.

Sea transport: International Maritime Dangerous Goods Code (IMDG CODE 40-20).

Air transport: The International Civil Aviation Organization-Technical Instructions on the Safe Transport of Dangerous Goods by Air (ICAO-TI 2022), International Air Transport Association-Dangerous Goods Regulations (IATA-DGA 64th).

Inland waterway transport: Regulations on the Supervision and Management of the Safety of Dangerous Goods Carried on Board Ships，European Agreement concerning the International Carriage of Dangerous Goods by Inland Waterways (ADN).

CATL Contemporary Amperex Technology Co. ,Limited
No.2 Xingang Road, Zhangwan Town, Jiaocheng District, Ningde City, Fujian Province, P.R.C., 352100

SAFETY DATA SHEET

Issue No.: 2023-A Doc No.: 2023-A-166 Issue Date: 3/31/2023

Model of transport	Land transport (ADR/RID)	Sea transport (IMDG)	Air transport (ICAO/IATA)
UN No.	3480/3481	3480/3481	3480/3481
Proper shipping name	Lithium ion batteries	Lithium ion batteries	Lithium ion batteries
Transport hazard class	9	9	9
Packing group	II		
Packing terms	/	P903	PI 965-967
Label			

15. Regulatory Information

15.1 U.S Federal Regulation

Occupational Safety and Health Act（OSHA）： Employers/businesses are required to ensure that lithium batteries, chargers and lithium ion drive related equipment used in the workplace are tested to appropriate test standards (e.g. UL 2054) and certified by a testing body with NRTL (Nationally Recognized Testing Laboratory) status. The certification is issued by a NRTL (Nationally Recognised Testing Laboratory) qualified testing body.

Toxic Substances Control Act（TSCA）： This product is not listed.

Clean Air Act（CAA）： This product is not listed.

Clean Water Act（CCW）： This product is not listed.

15.2 Canada Regulation

Workplace Hazardous Material Information System,（WHMIS）： Not controlled under WHMIS.

Hazardous Product Act（HPA）： This product is not listed.

Canadian Environmental Protection Act（CEPA）： This product is not listed.

15.3 German Regulation

《Verordnung über Anlagen zum Umgang mit wassergefährdenden Stoffen》（AwSV）： Hazard class of electrolyte to water of this product is WGK 1（Slight hazard to water）.

15.4 EU-Regulation

Contains no substances on the REACH candidate list.

Contains no REACH Annex XVII/XIV substances.

15.5 International Regulation

Australia inventory（AICS）： This product is not listed.

China inventory（IECSC）： This product is not listed.

Contemporary Amperex Technology Co. ,Limited
No.2 Xingang Road, Zhangwan Town, Jiaocheng District, Ningde City, Fujian Province, P.R.C., 352100

SAFETY DATA SHEET

Issue No.: 2023-A Doc No.: 2023-A-166 Issue Date: 3/31/2023

Japan inventory（ENCS）： This product is not listed.

Korea inventory（ISHL）： This product is not listed.

New Zealand Inventory of Chemicals（NZLoC）： This product is not listed.

16. Other Information

The information contained herein is furnished without warranty of any kind. Users should consider this data only as a supplement to other information gathered by them and must make independent determinations of the suitability and completeness of information from all sources to assure proper use and disposal of these materials and the safety and health of employees an oyees and customers.

P-164001381 01